Scholar Publishing Group
Kinetic Mechanical Engineering
https://doi.org/10.38007/KME.2020.010301
ISSN 2790-2676 Vol. 1, Issue 3: 1-8

Fuel Cell in Hybrid Electric Vehicle with Artificial Fish Swarm Algorithm

Mikko Vainio

Department of Mechanical Engineering, Faculty of Engineering, Tampere University, Korkeakoulunkatu 10, 33720 Tampere, Finland

Keywords: Artificial Fish Swarm Algorithm, Hybrid Power, Fuel Cell, Capacity Management

Abstract: Because of the slow dynamic response and poor stability of fuel cell(FC), composite power system is considered as a good solution. However, the complex energy storage makes the power and energy flow of the power system more complex, and new technologies are urgently needed to solve the problem of multi-mode energy distribution. Only by formulating efficient and reasonable energy management and optimization strategies can the performance and advantages of the complex power system be fully exploited. In this paper, the hybrid power system of FC vehicle is analyzed firstly, and the dual DC/DC converter structure is used as the research model. In order to reduce the operating cost of the system, the artificial fish swarm algorithm was introduced into the application scenario of FC tram, and the global optimal energy management strategy was proposed. The experimental results show that the ability management strategy based on artificial fish swarm algorithm is more effective in improving fuel economy.

1. Introduction

There are many types of new energy vehicles, including pure electric vehicles, FC vehicles and hybrid vehicles. Pure electric vehicles are driven by pure electric, and the main energy comes from power batteries, which have the advantages of low noise and no pollution. However, limited by the current key technology of batteries, they have shortcomings such as too long charging time and relatively short driving range [1-2]. The main power sources of hybrid electric vehicles include internal combustion engine and driving motor. The internal combustion engine usually works in the high-efficiency area, and the driving motor has two working modes: motor and generator. The braking energy can be recovered in the generator mode, but the cost of hybrid electric vehicles is relatively high. The main energy source of FC vehicles is the FC system device, which uses hydrogen as fuel to generate electricity, with high energy conversion efficiency, and the product is water, which has no pollution to the environment. Therefore, FC vehicles have become a research

Copyright: © 2020 by the authors. This is an Open Access article distributed under the Creative Commons Attribution License (CC BY 4.0), which permits unrestricted use, distribution, and reproduction in any medium, provided the original work is properly cited (https://creativecommons.org/licenses/by/4.0/).

hotspot of current new energy vehicles [3]. At present, the FC car on the market is not as vehicle FC system separate power source, because the FC output characteristic is relatively soft, in the case of load conditions change rapidly, the dynamic response is relatively slow, unable to brake energy recovery at the same time, so the FC vehicles are usually equipped with auxiliary power source, such as battery, super capacitor, etc. Therefore, it is a key technology to formulate a good energy management strategy to coordinate the work among several energy sources, which affects the economy of the vehicle and has an important influence on the working state of the FC stack, a key component in FC vehicles [4-5]. At the same time, considering that the FC system engine has a complex structure and is composed of many auxiliary systems, the control strategy of its FC system will also have a great impact on the consumption of FC system accessories [6]. In addition, with the development and maturity of intelligent Internet connection and vehicle-borne navigation technology, energy management strategy based on traffic road information has become a hot research direction at home and abroad [7].

At present, many countries in the world attach great importance to the development and utilization of hydrogen energy, and the technologies related to FC are gradually mature and many FC vehicles have been widely commercialized. Meanwhile, the technologies related to hydrogen production and storage are also making breakthroughs [8]. The United States is relatively early in the development of FC key technologies, as early as the 1990s began to develop and develop FC related projects. The United States has the world's leading technology proton membrane pure hydro-electric hydrogen production company, and the number of FC vehicles in the United States also ranks among the top in the world [9]. Due to the lack of energy, Japan attaches great importance to the research of hydrogen energy related technology, and began to carry out related research on FC in the 1980s. At present, Japan is the world leader in the development of FC commercialization, among which Toyota is the most representative automobile company in Japan [10]. From the current development trend of foreign countries, FC related technologies have been mature, FC vehicles have been commercialized, hydrogen manufacturing, storage and other technologies have been improved, and the driving range of FC vehicles is not short, but the current infrastructure construction is still not perfect. It is still a difficult problem blocking the widespread commercialization of FC vehicles [11-12].

Distribution of how to coordinate the power source of energy is a complex energy source is a key point in the research of FC vehicles, reasonable and effective energy management strategy is to work together, make each energy sources critical to improve the durability of the vehicle power performance, economy and system, and give full play to the advantages of FC, as well as auxiliary power source, the key to prolonging the service life of the system.

2. Capability Management Strategy of FC Based on Artificial Fish Swarm Algorithm

2.1. FC Vehicle Hybrid System

At present, battery banks or ultracapacitors are common auxiliary power supplies for FC. Taking the energy configuration of FC and batteries as an example, according to the different connection modes of each energy source and DC bus, The parallel hybrid power system of FC vehicles has the following three common topologies according to different DC/DC converter configurations [13-14].

(1) FC direct connection

In FIG. 1, the battery side is charged and discharged and a bidirectional DC converter is configured, while the FC is directly connected to the DC bus. The voltage level of the battery group is relaxed and the power supply condition is good. Under the parallel structure, the power of the battery can be directly regulated, and the output of the FC can be indirectly regulated due to the power coupling relationship, so as to realize the energy management of the power system [15].

However, because the FC is directly connected with the load, it is easy to expose the FC to more severe working conditions, which is not conducive to the life of the FC. In addition, FC have the characteristics of low voltage and high current, so if you want to match the voltage level of the bus, the performance of FC is higher, and the configuration cost is higher.

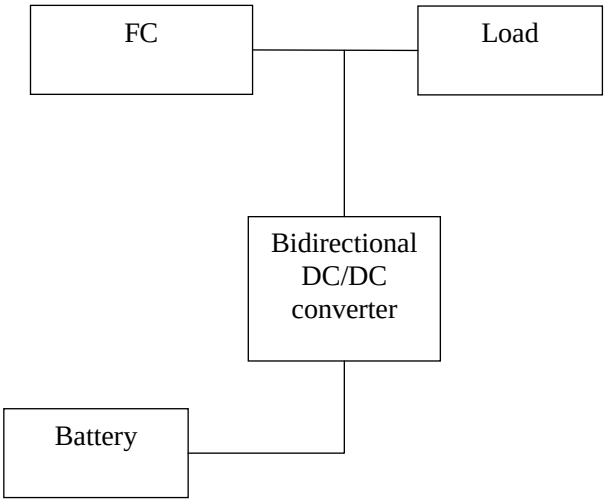

Figure 1. FC direct connection topology

(2) battery direct connection

In the structure shown in Figure 2, the battery directly discharges or charges itself from the DC bus, and the FC side is connected to the bus through a one-way DC/DC converter. The service conditions of FC with soft output characteristics are improved, which is beneficial to prolong their service life. In addition, due to the regulating effect of DC/DC converter, the requirements on the input side power supply quality are relaxed, which reduces the configuration cost of FC [16].

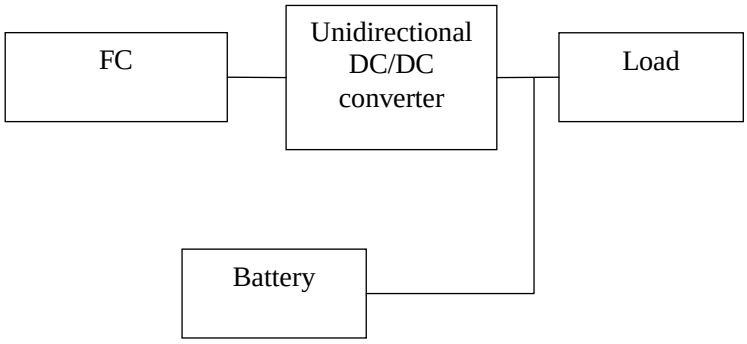

Figure 2. Battery direct connection topology

(3) Dual DC/DC converter

As shown in FIG. 3, the FC and battery bank are connected to the power bus through unidirectional and bidirectional DC/DC converters, respectively. DC/DC converter has the function of regulating voltage and improving power supply quality. Therefore, the power system of this structure can provide stable current, reduce the voltage level of energy source and other performance requirements accordingly, and it is easy to realize the control of power size and direction between energy sources [17-18]. However, because the DC/DC converter will lose some power, the net output efficiency of this structure is slightly lower than that of the above two

schemes.

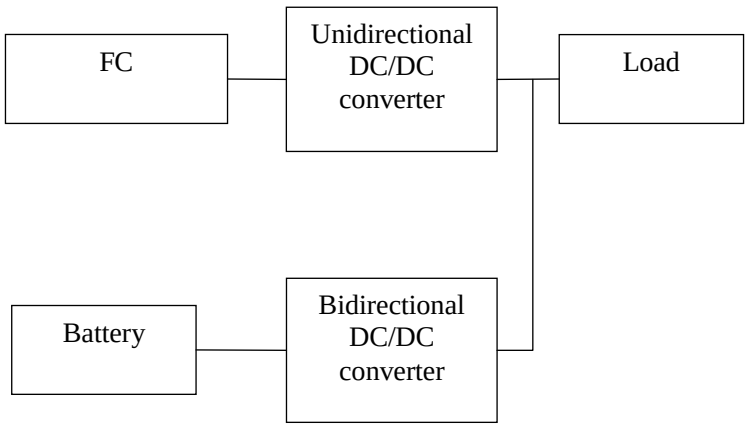

Figure 3. Dual DC converter topology

In addition, some studies have used battery banks and ultracapacitors as three energy sources of auxiliary power supply. This three-energy source structure can give full play to the advantages of battery and ultracapacitor, achieve a certain degree of complementarity in output characteristics, and power distribution can also be more flexible. The power performance and fuel economy of the power system are often better than those of the FC + battery structure. However, the increase of energy sources will inevitably make the structure more complex, and the mass of the power system will occupy more space, and the cost will be higher. The three energy source scheme also has different bus connection modes, the key is whether each energy source side is equipped with DC converter, similar to the above characteristics.

In this paper, considering the feasibility of practical application and the cost and fuel economy of the power system, the configuration scheme as shown in FIG. 3 is selected to carry out the research of energy management strategy. The energy management system of hybrid power system receives the state information of each major component and controls the output power of each energy source according to the power allocation strategy. The energy management strategy needs the information of the power required by the driving load fed back by the motor and the motor controller, the SOC information of the battery bank and the power information of the FC. Considering the efficiency characteristics of the DC converter, it also needs the information of each DC converter. In general, the power distribution can be accomplished by the energy management strategy based on the state information of the power system through the decision control of the output power of the energy source. Under different power allocation decisions, the power flow states of the power system are different.

2.2. Energy Management Strategy

Artificial Fish Swarm Algorithm (AFSA) simulates the behavior of fish and fish, and finally realizes bionic optimization. According to the algorithm, there are four basic behaviors of fish: foraging, clustering, tailgating and random movement.

Foraging behavior is the instinctive behavior of individual fish. This behavior determines the concentration of food (or fitness) within a certain range based on the fish's sight or smell, and moves the fish toward the area of highest fitness. Clustering behavior reflects the influence of fish on individuals, that is, individuals tend to the center of the fish. Due to the limited perceptual range of individuals, clustering behavior improves the foraging efficiency of all individuals in the group, which reflects the group cooperation ability of fish. Rear-end behavior is another cooperative

behavior of fish groups, that is, individuals will follow the fish in the best position in the fish group, and this behavior will make the whole group move toward a better position. Random behavior simulates the free movement of fish, which is of great significance for AFSA algorithm to jump out of local optimal solution when searching for optimization. Based on these basic behaviors, AFSA defines the concept of artificial fish. The perceptual range of artificial fish is very important for the optimization of the algorithm.

Foraging behavior mimics the artificial fish searching nearby areas and moving to a position of higher fitness.

$$X_j = X_i + visual \cdot random \tag{1}$$

Where, visual is the radius of the perception range of artificial fish. random is a random number, which follows a uniform distribution in the interval [-1,1].

The moving process is as follows:

$$X_{i,t+1} = X_{i,t} + \frac{X_j - X_{i,t}}{\| X_j - X_{i,t} \|} \cdot step \cdot random \tag{2}$$

If Yj is not greater than Yi, fish i continues to search for new locations until it reaches the maximum number of foraging searches. If the fish does not find a better location, it will move randomly in this iteration.

The rear-end behavior mimics the artificial fish moving toward the better positioned fish.

Random behavior mimics the random movement of a fish. This behavior is of great significance for expanding the search space and jumping out of local optimal solutions.

$$X_{i.t+1} = X_{i,t} + visual \cdot random \tag{3}$$

Combined with the application background of AFSA and FC tram, the energy management strategy based on AFSA is introduced. The policy steps are as follows:

The number of artificial fish in the fish is N; Repeat steps 2-3 to obtain the fitness of all individuals; If there are no other fish, they will conduct foraging behavior or random behavior according to whether they find a better position. If there are other fish, then judge the position of the center of the fish, and judge the position of the optimal artificial fish nearby; The fitness Y1 of clustering behavior and the fitness Y2 of rear-end behavior were calculated. By comparing Y1 and Y2, the artificial fish were determined to conduct clustering behavior or rear-end collision behavior according to the results. Loop steps 5 to 9 to update the position of all fish; Judge whether the iteration termination condition is met, if not, continue the iteration, and if the condition is met, the final result will be output.

3. FC Capability Management Experiment

This paper will verify whether the improved power following strategy can optimize the operating interval of FC and whether the change rate of fuel demand power is optimally limited. Finally to validate the proposed prediction based on the conditions to improve the effectiveness of the proposed control strategy, this article will select one of the travel route and predict traffic characteristics on its current path, then test the power FC car in traditional power following strategy with in this paper, based on the working condition of predictive power following strategy for the improvement of performance under the two strategies.

In Matlab/Simulink environment, the strategy based on genetic algorithm (GA) and the strategy based on AFSA are simulated. In this paper, four operating conditions, HUDDS operating condition,

FTP75 operating condition, LA92 operating condition and NEDC, were selected to observe the demand power of the FC system of the full-power FC vehicle under the traditional power following strategy and the improved power following strategy proposed in this paper, and to observe the distribution of the FC demand power points. Verify whether the improved strategy can optimize the operating interval of FC.

4. Analysis of Experimental Results

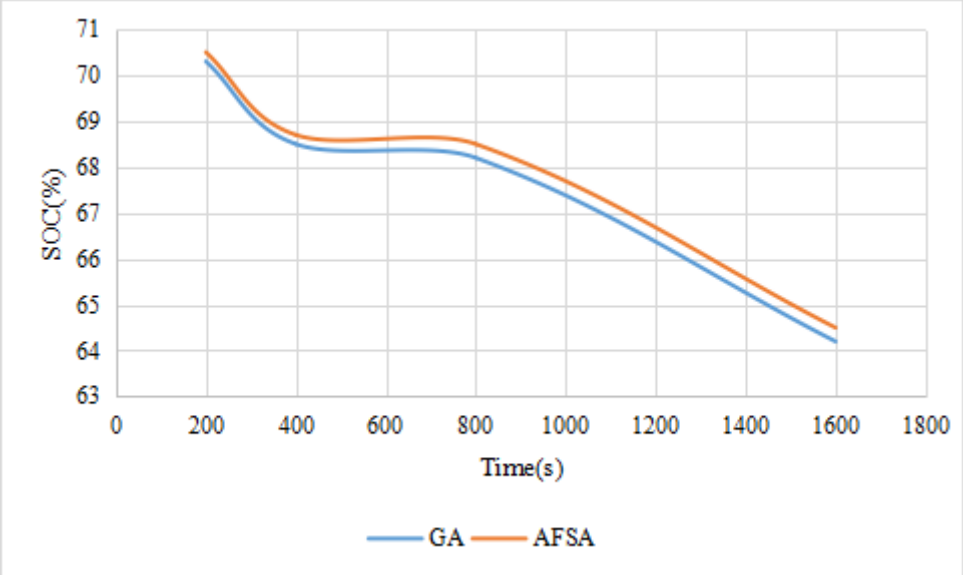

Figure 4. SOC curves optimized by two algorithms

FIG. 4 shows the SOC curves optimized by genetic algorithm and artificial fish swarm algorithm, which are both within the set reasonable interval. The final SOC values of power batteries after the complete working condition are basically consistent with those of fuzzy control strategy before optimization, both of which are around 60%.

Table 1. Equivalent hydrogen consumption optimized by the two algorithms

	Equivalent hydrogen consumption /g	Save hydrogen /%
GA	475	0.61
AFSA	458	1.53

Table 1 shows that both algorithms optimized equivalent hydrogen consumption were reduced by about 0.61%, 1.53% than before, that the genetic algorithm in the process of optimization into the local optimum, and the artificial fish algorithm in the optimization process out of local optimal point, got the better fitness function value, realize composite FC power supply vehicle fuel economy improvements.

5. Conclusion

FC vehicles can achieve zero emission, high efficiency and low noise in the running process. Based on the above advantages, FC vehicles have been widely concerned by the government and automobile manufacturers at home and abroad in recent years. FC vehicles generally use a composite power supply structure to provide energy, and how to reasonably distribute the output

power of FC and auxiliary power supply under the premise of meeting the vehicle's power requirements has been the focus of many scholars. In this paper, the composite power structure of FC and power cells is adopted, and the artificial fish swarm algorithm is used to optimize the capacity management strategy of FC.

Funding

This article is not supported by any foundation.

Data Availability

Data sharing is not applicable to this article as no new data were created or analysed in this study.

Conflict of Interest

The author states that this article has no conflict of interest.

References

[1] Wu P, Bucknall R. Hybrid FC and battery propulsion system modelling and multi-objective optimisation for a coastal ferry. International journal of hydrogen energy, 2020, 45(4): 3193-3208. https://doi.org/10.1016/j.ijhydene.2019.11.152

[2] Rezk H, Nassef A M, Abdelkareem M A, et al. Comparison among various energy management strategies for reducing hydrogen consumption in a hybrid FC/supercapacitor/battery system. International Journal of Hydrogen Energy, 2020, 46(8): 6110-6126. https://doi.org/10.1016/j.ijhydene.2019.11.195

[3] Manohar M, Kim D. Advantageous of hybrid FC operation under self-humidification for energy efficient bipolar membrane. ACS Sustainable Chemistry & Engineering, 2019, 7(19): 16493-16500. https://doi.org/10.1021/acssuschemeng.9b03735

[4] Ezzat M, Dincer I. Exergoeconomic analysis and optimization of a new hybrid FC vehicle. International Journal of Hydrogen Energy, 2020, 45(9): 5734-5744. https://doi.org/10.1016/j.ijhydene.2019.07.104

[5] Carello M, de Carvalho Pinheiro H, Longega L, et al. Design and modelling of the powertrain of a hybrid FC electric vehicle. SAE Int. Adv. Curr. Pract. Mobil, 2020, 3(6): 2878-2892. https://doi.org/10.4271/2020-01-0734

[6] Salehpour M J, Zarenia O, Hosseini Rostami S M, et al. Convex multi‐objective optimization for a hybrid FC power system of more electric aircraft. International Transactions on Electrical Energy Systems, 2020, 30(7): e12427. https://doi.org/10.1002/2050-7038.12427

[7] Zhou Y, Ji Q, Hu C, et al. A hybrid FC for water purification and simultaneously electricity generation. Frontiers of Environmental Science & Engineering, 2023, 17(1): 1-12. https://doi.org/10.1007/s11783-023-1611-6

[8] Kwan T H, Zhang Y, Yao Q. A coupled 3D electrochemical and thermal numerical analysis of the hybrid FC-thermoelectric device system. international journal of hydrogen energy, 2018, 43(52): 23450-23462. https://doi.org/10.1016/j.ijhydene.2018.10.202

[9] González E L, Cuesta J S, Fernandez F J V, et al. Experimental evaluation of a passive FC/battery hybrid power system for an unmanned ground vehicle. international journal of hydrogen energy, 2019, 44(25): 12772-12782. https://doi.org/10.1016/j.ijhydene.2018.10.107

[10] Benlahbib B, Bouarroudj N, Mekhilef S, et al. Experimental investigation of power

management and control of a PV/wind/FC/battery hybrid energy system microgrid. International Journal of Hydrogen Energy, 2020, 45(53): 29110-29122. https://doi.org/10.1016/j.ijhydene.2020.07.251

[11] Kamel A A, Rezk H, Abdelkareem M A. Enhancing the operation of FC-photovoltaic-battery-supercapacitor renewable system through a hybrid energy management strategy. International Journal of Hydrogen Energy, 2020, 46(8): 6061-6075. https://doi.org/10.1016/j.ijhydene.2020.06.052

[12] Changizian S, Ahmadi P, Raeesi M, et al. Performance optimization of hybrid hydrogen FC-electric vehicles in real driving cycles. International Journal of Hydrogen Energy, 2020, 45(60): 35180-35197. https://doi.org/10.1016/j.ijhydene.2020.01.015

[13] Tanç B, Arat H T, Conker Ç, et al. Energy distribution analyses of an additional traction battery on hydrogen FC hybrid electric vehicle. International Journal of Hydrogen Energy, 2020, 45(49): 26344-26356. https://doi.org/10.1016/j.ijhydene.2019.09.241

[14] Salameh T, Abdelkareem M A, Olabi A G, et al. Integrated standalone hybrid solar PV, FC and diesel generator power system for battery or supercapacitor storage systems in Khorfakkan, United Arab Emirates. International Journal of Hydrogen Energy, 2020, 46(8): 6014-6027. https://doi.org/10.1016/j.ijhydene.2020.08.153

[15] Yue M, Jemei S, Gouriveau R, et al. Review on health-conscious energy management strategies for FC hybrid electric vehicles: Degradation models and strategies. International Journal of Hydrogen Energy, 2019, 44(13): 6844-6861. https://doi.org/10.1016/j.ijhydene.2019.01.190

[16] Singh S, Chauhan P, Singh N J. Capacity optimization of grid connected solar/FC energy system using hybrid ABC-PSO algorithm. International Journal of Hydrogen Energy, 2020, 45(16): 10070-10088. https://doi.org/10.1016/j.ijhydene.2020.02.018

[17] Okundamiya M S. Size optimization of a hybrid photovoltaic/FC grid connected power system including hydrogen storage. International Journal of Hydrogen Energy, 2020, 46(59): 30539-30546. https://doi.org/10.1016/j.ijhydene.2020.11.185

[18] Du C, Huang S, Jiang Y, et al. Optimization of energy management strategy for FC hybrid electric vehicles based on dynamic programming. Energies, 2020, 15(12): 4325. https://doi.org/10.3390/en15124325