Scholar Publishing Group
Kinetic Mechanical Engineering
https://doi.org/10.38007/KME.2020.010406
ISSN 2790-2676 Vol. 1, Issue 4: 47-54

Computational Fluid Dynamics-Based Programming of Mechanical Power Generation Applications

Varun Anu

Faculty of Mechanical, Chemical and Industrial Engineering, Department of Mechanical Engineering, University of Engineering and Technology Peshawar, Peshawar, Khyber Pakhtunkhwa, Pakistan

Keywords: Computational Fluid Dynamics, Mechanical Power Generation, Application Programming, Marine Hydrodynamic Energy

Abstract: Electricity has a vital impact on human production and life, and energy storage systems are regarded as an important part of the "generation - transmission - distribution - use - storage" process. Mechanical elastic energy storage technology is a new type of energy storage technology recently proposed, which uses mechanical vortex spring as the energy storage medium and permanent magnet synchronous motor as the actuator to achieve energy storage and power generation. The aim of this paper is to investigate the design of a mechanical power generation application based on computational fluid dynamics. In this paper, a mechanical rectifier wave energy generation device is designed and the main work is as follows: the general structure of the device is designed, which mainly consists of three parts: the energy take-off mechanism (Power take-off, PTO for short), the float and the generator. The design of the structural parameters of the magnetically coupled force transfer system is completed according to the magnitude of the PTO force applied to the system. Based on the simulation model of the device, the effect of damping on the performance of the PTO system is analysed, and the input and output powers under different load resistance conditions are obtained to verify the optimal damping theory. The effect of wave period on the input-output power is obtained by varying the wave conditions.

1. Introduction

As numerical flow viscous field calculation methods are better than dynamic flow theory in predicting boundary layer separation and transformation, this paper focuses on three-dimensional numerical flow viscous field calculation methods to predict the hydrodynamic performance of

Copyright: © 2020 by the authors. This is an Open Access article distributed under the Creative Commons Attribution License (CC BY 4.0), which permits unrestricted use, distribution, and reproduction in any medium, provided the original work is properly cited (https://creativecommons.org/licenses/by/4.0/).

marine sea current engines under different operating conditions. The prediction of the hydrodynamic performance of a marine rotor is more complex than that of a wind turbine due to the open flow field without casing, the fineness of the blades and the choice of rotational and cavitation coordinate systems. The use of three-dimensional numerical methods to calculate the viscosity field of the flow field to predict the hydrodynamic performance of marine runners is a timely and challenging problem in this field [1-2].

In the study of computational fluid dynamics based design of mechanical power generation applications, many scholars have studied it with good results, for example, Reddy A conducted numerical simulations and experimental validation using push-pull method with wing elements developed for a horizontal axis sea current engine designed for the basic wing of NACA63-8xx series. Trends in power and drag coefficients versus terminal speed ratio (TSR) were obtained for different angles of attack and flow rates, and the effect of parallel twin rotors was further analysed [3].Ghosh S K investigated the performance of a sea current engine with an increased casing, i.e. an increase in the inlet velocity of the impeller by adding a reduced pressure and velocity casing, although it could be applied in the low speed sea current region. However, the manufacturing cost is considerably higher [4].

For the mechanically rectified wave energy generation device designed in this paper, the overall structure consists of three main parts: the float, the PTO system and the generator. Firstly, the overall size of the float and the rated power of the generator are determined according to the power generation required by the design. Taking advantage of the ball screw's ability to convert low-speed linear motion into high-speed rotary motion, the device uses a ball screw as the energy output mechanism. In addition, a magnetically coupled force transfer system is used between the float and the PTO system to ensure that the unit is sealed in the marine environment. The energy output mechanism is the core part of the whole wave energy generation device, and the dynamics analysis of the PTO system is based on the hydrodynamic parameters of the float. In addition, the magnetically coupled force transfer system is designed according to the internal structure of the device and the design objectives. The magnetic field forces of the magnetically coupled force transfer system are calculated using ansoft software for different structural dimensions to determine the required magnet size.

2. Research on the Design of Mechanical Power Generation Applications Based on Computational Fluid Dynamics

2.1. Overview of Wave Energy Conversion Devices

For a typical wave energy generation device, a three-stage conversion is required, as shown in Figure 1. The first stage of conversion is to absorb the energy of the waves in the ocean through the floats and convert it into kinetic energy; the second stage of conversion is to further convert the kinetic energy of the floats into mechanical, hydraulic or pneumatic energy; and the third stage of conversion device is further converted into electrical energy and fed into the grid [5-6].

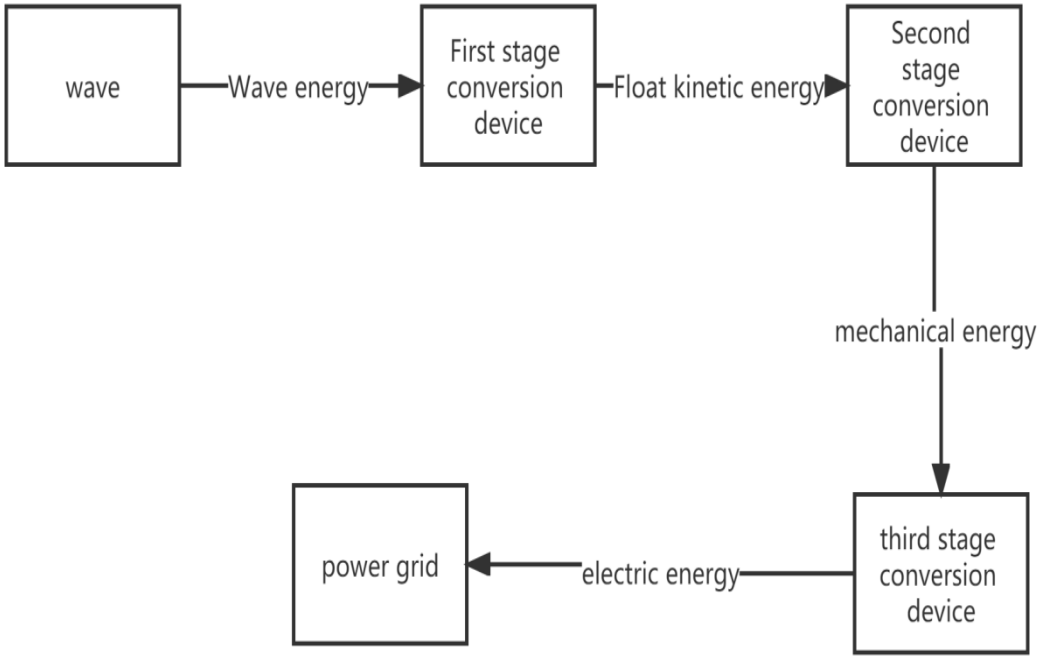

Figure 1. Triple conversion of wave energy

2.2. Hydrodynamic Performance Parameters

Hydrodynamic efficiency is the efficiency exhibited by marine generators when operating in seawater. The study of marine sea current generators can be based on the design of wind turbines, which, although similar in structure, are unique due to the variations in their working medium. Predictive analysis of the hydrodynamic performance of marine power generators under different operating conditions allows for optimum adjustment and control of power under different operating conditions, so that the operating rules can be understood and reasonable maintenance can be carried out in time to achieve longer life and maximum efficiency. The performance of the wing profile is critical to the overall performance of the marine corridor, and predicting the hydrodynamic performance of the marine corridor wing profile is crucial [7-8].

2.3. Numerical Calculation Method for Three-Dimensional Viscous Flow Fields

A generic form of the computational fluid dynamics control equations is shown in (1) [9-10]: the

$$\frac{\partial(\rho\phi)}{\partial t}+\nabla\cdot\left(\rho\vec{u}\phi\right)=\nabla\cdot\left(\Gamma\nabla\phi\right)+S \tag{1}$$

The expansion takes the form of equation (2)

$$\frac{\partial(\rho\phi)}{\partial t}+\frac{\partial(\rho u\phi)}{\partial x}+\frac{\partial(\rho v\phi)}{\partial y}+\frac{\partial(\rho w\phi)}{\partial z}=\frac{\partial}{\partial x}\left(\Gamma\frac{\partial\phi}{\partial x}\right)+\frac{\partial}{\partial y}\left(\Gamma\frac{\partial\phi}{\partial y}\right)+\frac{\partial}{\partial z}\left(\Gamma\frac{\partial\phi}{\partial z}\right)+S \tag{2}$$

where ϕ is the generic variable and u, v, w, T, etc. are the solution variables; Γ is the generalised diffusion coefficient and S is the generalised source term1 [11-12].

3. Research and Design Experiments on the Design of Mechanical Power Generation Applications Based on Computational Fluid Dynamics

3.1. Delineation of the Sea Current Machine Grid

The first pre-processing of CFD calculations is the model building and meshing. The quality of the mesh delineation is very important for the calculation of impeller mechanical performance prediction, and a good mesh quality can guarantee the reliability of the calculation results. In this paper, an unstructured mesh is used, which is more adaptable and can produce a relatively high quality mesh for complex geometries [13-14].

In this paper, Gambit software is used for the meshing of the sea current machine. As the blade of the sea current machine has a large spreading chord ratio and the blade produces a large twist from the root to the tip, it is more difficult to generate the mesh directly. Therefore the flow field needs to be chunked and locally encrypted, which can effectively control the quantity and quality of the mesh [15-16]. The external topology of the impeller blade and the use of the size function to encrypt the mesh asymptotically can obtain a relatively high quality mesh on the blade surface.

3.2. Experimental Design

This paper analyses the mechanical power generation application constructed in this paper, firstly by predicting the results of the hydrodynamic performance of individual rotors under different calculation models, and secondly by testing and analysing the forward and reverse power of the turbine.

4. Experimental Analysis of Research on the Design of Mechanical Power Generation Applications Based on Computational Fluid Dynamics

4.1. Hydrodynamic Performance Comparison

In this paper, the predicted hydrodynamic performance of individual rotors under design conditions is compared using different calculation models respectively as shown in Table 1 and Figure 2.

Table 1. Comparison of hydrodynamic performance under single-rotor design conditions

	SA count	SA error	LES count	LES error	experiment
Cp	0.429	-2.67	0.445	-1.33	0.451
Ct	0.891	9.67	0.845	2.20	0.814

The results of the LES model are in good agreement with the experimental results, but the calculation time is longer; the power prediction of the SA turbulence model is within a reasonable error range, as the main concern of the current machine is its power output characteristics, and the thrust is balanced by the pile foundation fixed on the seabed. The SA model is also feasible for predicting the output power characteristics of the turbulent machine, especially at the design end speed ratio TSR=6, which is in good agreement with the experimental results; moreover, its short calculation time is often used in the prediction of impeller mechanical performance in practical engineering.

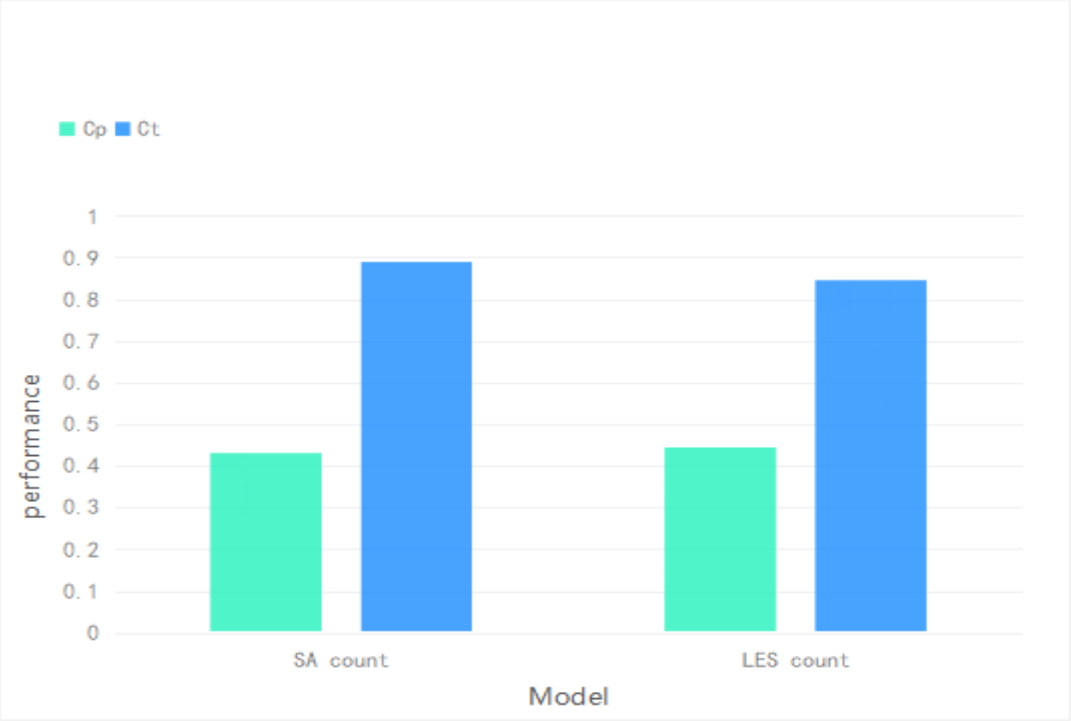

Figure 2. Comparison of the error in the calculation between the two models

4.2. Turbine Power

In this paper, the forward and reverse power of the turbine at different flow rates is analysed, mainly for the variation of its forward and reverse output power and the efficiency of the freighter, and the experimental data is shown in Figure 3 Fig. 4.

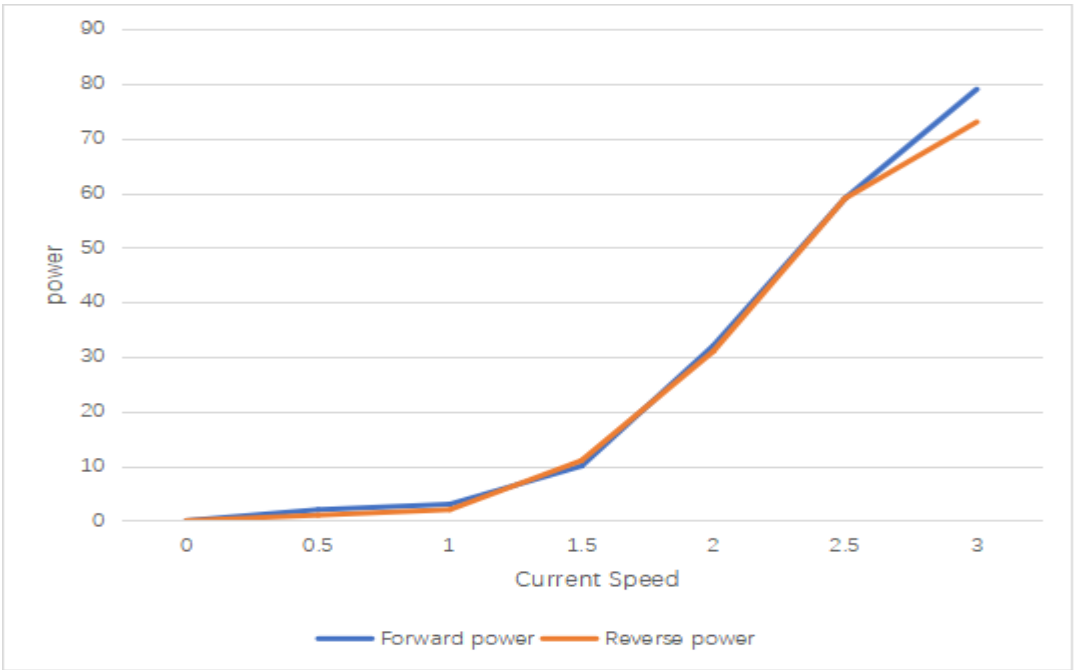

Figure 3. Positive and negative output power of the water turbine

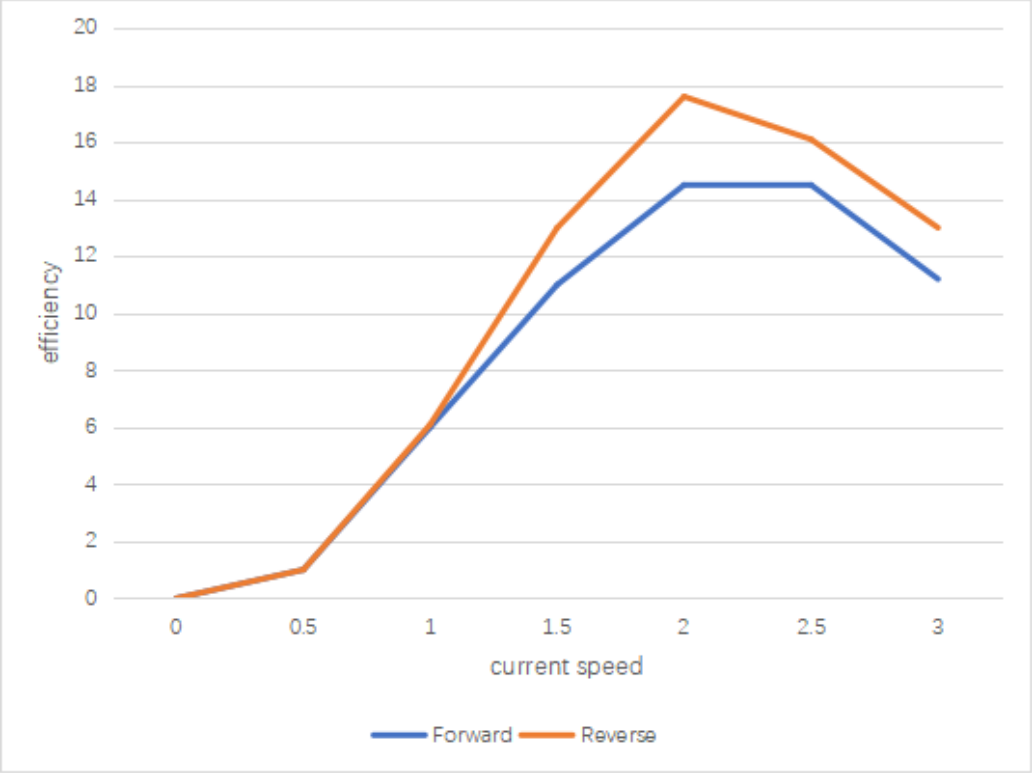

Figure 4. Energy acquisition efficiency

As can be seen from Figure 3, the difference between the output power of the turbine in the forward and reverse directions is not significant, which confirms that the impeller of the turbine designed in this paper has bi-directional energy gain characteristics. When the flow rate is less than 2 m/s, the output power in both forward and reverse conditions of the turbine shows an exponential increase, and when the flow rate is greater than 2 m/s, the increase in output power slows down, indicating that the energy gaining efficiency of the turbine should show a decreasing trend at this time. From Figure 6-12, it can be seen that the difference between the output power of the turbine in the forward and reverse directions is not large, which proves that the impeller of the turbine designed in this paper has bi-directional energy acquisition characteristics. When the flow velocity is less than 2 m/s, the output power of the turbine in both forward and reverse conditions shows an exponential increase, and when the flow velocity is greater than 2 m/s, the increase in output power slows down, which indicates that the energy gain efficiency of the turbine should be reduced at this time. Figure 4 shows the graph of the energy gain efficiency of the turbine, which shows that the energy gain efficiency of the turbine changes with the change of the flow rate and is not constant. When the flow velocity is less than 2m/s, the energy gain efficiency increases linearly with the increase of the incoming flow velocity. At a flow velocity of 2m/s, the energy gain efficiency reaches a maximum of around 16%. At flow rates greater than 2m/s, the efficiency decreases. When the current velocity is maintained at 1.5m/s to 3m/s, the average energy efficiency is maintained at over 12%. Compared with the energy gain efficiency of more mature marine energy generation devices overseas, the energy gain efficiency of this turbine still needs to be improved [17-18].

5. Conclusion

This paper investigates the hydrodynamic performance of a horizontal axis sea current energy generation machine for renewable energy development. The geometric model of the current

machine used in the calculations is first given and the key control geometry parameters of the current machine model are analysed. Although this paper has verified the feasibility of the three-dimensional viscous flow field numerical calculation method for predicting sea current machines and has predicted some hydrodynamic characteristics of sea current machines, due to the limited time, the research on the hydrodynamic performance of sea current machines using this method has just started, and the following directions can be studied in depth in the future: (1) to study the hydrodynamic performance of sea current machines under different pitch angles and different wing profiles of sea current machine blades with different geometric installation angles, thicknesses, chord lengths and curvatures. thickness, chord length and curvature, to optimize the design of the impeller to ensure that the designed turbine has greater efficiency and stronger resistance to cavitation. (2) Study the hydrodynamic characteristics of the turbine under different angles of attack of the incoming current, and predict the effect of the change in the direction of the current on its performance. (3) In-depth study of the dynamic hydrodynamic characteristics of the current machine under different wave periods and wave heights and its ability to resist cavitation, in order to protect the safe operation of the current machine in complex environments. (4) To study the self-starting performance of sea-runners under different submergence depths and analyse their hydrodynamic characteristics during transient start-up, so as to provide support and reference for the start-up operation of sea-runners.

Funding

This article is not supported by any foundation.

Data Availability

Data sharing is not applicable to this article as no new data were created or analysed in this study.

Conflict of Interest

The author states that this article has no conflict of interest.

References

[1] Vaishnav S, Kapadiya V, Harish R, et al. Design and analysis of energy-efficient solar panel cooling system using computational fluid dynamics. IOP Conference Series: Materials Science and Engineering, 2021, 1128(1):012033 (14pp). https://doi.org/10.1088/1757-899X/1128/1/012033

[2] Mi B G, Huang H. Intake grille design for an embedded ventilation-and-cooling system in an aircraft. Proceedings of the Institution of Mechanical Engineers, Part G: Journal of Aerospace Engineering, 2022, 236(11):2352-2365. https://doi.org/10.1177/09544100211062810

[3] Reddy A, Cockrum J, Savastano L, et al. Unifying theory of carotid plaque disruption based on structural phenotypes and forces expressed at the lumen/ wall interface. Stroke and Vascular Neurology, 2022, 124(N):27-42.

[4] Ghosh S K, Singh S. Pressure drop and heat transfer characteristics in 60°Chevron plate heat exchanger using Al2O3, GNP and MWCNT nanofluids. International Journal of Numerical Methods for Heat & Fluid Flow, 2022, 32(8):2750-2777. https://doi.org/10.1108/HFF-08-2021-0580

[5] Dinarvand S, Nejad A M. Off-centered stagnation point flow of an experimental-based hybrid nanofluid impinging to a spinning disk with low to high non-alignments. International Journal of Numerical Methods for Heat & Fluid Flow, 2022, 32(8):2799-2818. https://doi.org/10.1108/HFF-09-2021-0637

[6] Yuen A, Cordeiro I, Chen T, et al. Multiphase CFD modelling for enclosure fires-A review on past studies and future perspectives. Experimental and Computational Multiphase Flow, 2022, 4(1):1-25. https://doi.org/10.1007/s42757-021-0116-4

[7] Habashi W G, Targui A. On a reduced-order model-based optimization of rotor electro-thermal anti-icing systems. International Journal of Numerical Methods for Heat & Fluid Flow, 2022, 32(8):2885-2913. https://doi.org/10.1108/HFF-06-2021-0417

[8] Zhang C, Zhou J, Meng X. Temperature rise of magnetorheological fluid sealing film in a spiral grooved mechanical. Industrial Lubrication and Tribology, 2022, 74(6):683-691. https://doi.org/10.1108/ILT-01-2022-0030

[9] Nagu K, Kumar A. Influence of brass interlayer and water cooling on microstructure, mechanical and corrosion behaviour of friction stir welded AA6061-T6 alloy. Proceedings of the Institution of Mechanical Engineers, Part L: Journal of Materials: Design and Applications, 2022, 236(10):2037-2057. https://doi.org/10.1177/14644207221095137

[10] Ravikumar N, Tamilarasan T R, Rajendran R, et al. Tribological behavior of graphene-based friction composite tested on cryogenically treated cast iron. Proceedings of the Institution of Mechanical Engineers, Part L: Journal of Materials: Design and Applications, 2022, 236(9):1895-1906. https://doi.org/10.1177/14644207221088021

[11] Wang Y, Adam S A A, Ahmed G A A M, et al. Effects of various processing parameters on the mechanical properties and dimensional accuracies of Prosopis chilensis/PES composites produced by SLS. Rapid Prototyping Journal, 2022, 28(6):1144-1167. https://doi.org/10.1108/RPJ-09-2020-0223

[12] Wang J, Mo Y, Hong Y, et al. Simulation and experimental research on the influence of lubrication on the comprehensive friction of TGDI engine. Industrial Lubrication and Tribology, 2022, 74(6):663-673. https://doi.org/10.1108/ILT-12-2021-0472

[13] Wang S, Zhou J, Shao C, et al. Study on the prediction method and the flow characteristics of gas-liquid two-phase flow patterns in the suction chamber. International Journal of Numerical Methods for Heat & Fluid Flow, 2022, 32(8):2700-2718. https://doi.org/10.1108/HFF-08-2021-0588

[14] Yang X, Hu Y, Liu Z. Enhancing turbulence: a potential strategy for drag reduction based on ground transportation systems (GTS) model. International Journal of Numerical Methods for Heat & Fluid Flow, 2022, 32(8):2819-2840. https://doi.org/10.1108/HFF-06-2021-0387

[15] Ebrahimpour Z, Sheikholeslami M, Farshad S A. Heat transfer within linear Fresnel unit using parabolic reflector. International Journal of Numerical Methods for Heat & Fluid Flow, 2022, 32(8):2841-2863. https://doi.org/10.1108/HFF-05-2021-0338

[16] Pollmann N, Gallas J, Brandenburg M C, et al. Investigation of hydro-mechanical processes in fluid-saturated fractured rock based on numerical model generation. IOP Conference Series: Earth and Environmental Science, 2021, 833(1):012107 (8pp). https://doi.org/10.1088/1755-1315/833/1/012107

[17] Mo-Ru S, Yue-Heng W, Rui Z, et al. Study on the effect of rotor tip fillet edge in axial compressor. Proceedings of the Institution of Mechanical Engineers, Part A: Journal of Power and Energy, 2022, 236(6):1031-1047. https://doi.org/10.1177/09576509221086462

[18] Marino V, D'Arco M. Environmental citizenship behavior and sustainability apps: an empirical investigation. Transforming Government: People, Process and Policy, 2022, 16(2):185-202. https://doi.org/10.1108/TG-07-2021-0118