Scholar Publishing Group
Kinetic Mechanical Engineering
https://doi.org/10.38007/KME.2023.040201
ISSN 2790-2676 Vol. 4, Issue 2: 1-9

Optimal Control Strategy of Construction Machinery Motor Considering Genetic Algorithm

Nair Rajesh

Department of Mechanical Engineering, Bharath Institute of Science and Technology (BIST), Bharath Institute of Higher Education and Research (BIHER), Chennai, Tamil Nadu 600073, India

Keywords: Genetic Algorithm, Construction Machinery, Machine Optimization, Control Strategy

Abstract: Genetic algorithm is a global search optimization method, which has high efficiency and robustness in solving the control problems of complex systems. This paper first introduces the basic theory of genetic algorithm, coding method, fitness function design principle and other basic theoretical knowledge, then analyzes and studies them according to the model, establishes a simple and fast mathematical equation to solve the motor position and speed distribution law, and constructs a multi-objective optimization problem with robustness and efficiency based on the standard normal form system dynamic characteristic parameter self-tuning network. The test results show that the genetic algorithm can get an optimal solution when setting PID parameters, and the time to find the global optimal value is fast.

1. Introduction

With the continuous development of science and technology, people's living standards have gradually improved, and higher requirements have been put forward for product quality and production efficiency. In order to meet the growing market demand, many new processes and equipment have also emerged. For example, in the blast furnace iron making technology, the principle of extrusion granulation is applied to process ore raw materials to make fine carbon, and the rotary pendulum machine is used for rotary swinging to carry out metallurgical thrust grinding. These advanced methods can solve the problems existing in traditional industries and improve the output. However, due to their low production efficiency and high requirements for equipment, they cannot be widely used in the actual engineering field [1-2].

The research and development of genetic algorithm is the most effective method to solve the complex system problems. In recent years, scholars at home and abroad have conducted a large

Copyright: © 2023 by the authors. This is an Open Access article distributed under the Creative Commons Attribution License (CC BY 4.0), which permits unrestricted use, distribution, and reproduction in any medium, provided the original work is properly cited (https://creativecommons.org/licenses/by/4.0/).

number of in-depth and extensive discussions on genetic optimization ideas from different angles, and have made many important achievements. Foreign scholars have carried out a lot of research on the application of genetic operators in typical projects [3-4]. They use evolutionary computing theory to solve chromosome crossover and mutation, at the same time, they integrate the optimal solution into a population function and generate a population size through random selection strategy to control the number of individuals within the search range and the global convergence, thus realizing the optimization method of mutual transformation between particle swarm optimization (GA) and ant colony optimization problem. Some domestic scholars believe that the improved local search for the optimal solution, and the evolutionary computation theory is introduced to solve the most accurate or global error minimization in dynamic planning. At the same time, when considering factors such as population size and individual diversity, the probability density function of information distribution within the population and the weight distribution of the population are randomly generated [5-6]. Some scholars carried out simulation experiments on the improved multi joint driving manipulator. The experiment shows that this method is an effective way to improve the efficiency of mechanical motor and accelerate the speed of work piece unclamping. Therefore, based on genetic algorithm, this paper studies the optimal control strategy of construction machinery motor machine.

Genetic algorithm is a global search method generated by imitating the natural laws of the biological world. It has the advantages of fast convergence, strong robustness and wide application. In this paper, a genetic operator is designed to study the optimal control strategy for motor machines considering the optimization objective function of the group decision-making mechanism (wheel type random selection) problem. In the process of simulation experiment, stock method and correlation analysis are used to verify the effectiveness of the algorithm.

2. Discussion on Optimal Control Strategy of Construction Machinery Motor Considering Genetic Algorithm

2.1. Construction Machinery, Motor and Machine

Construction machinery plays an irreplaceable role in agricultural production and is an indispensable part of China's national economic development [7-8]. The role of construction machinery, motor and machine is mainly to pull all kinds of power required in agricultural production, so that they can be used in farmland, beside roads or in cities, and can provide convenience for people's life. The application fields of construction machinery motors are very wide, such as engineering construction, transportation, etc. For example, tractors can complete farmland irrigation. Transporting high-power pesticides to spray crops may cause soil hardening or material pollution. Planting vegetables and fruits in greenhouses requires a lot of manpower to keep fresh. When the temperature in the greenhouses is too high or the humidity is insufficient, manual operation is required to ensure that the normal growth and quality of crops are not affected. The dragging mechanism of construction machinery consists of two parts, one of which is used to pull and move operators or objects. The other is used to connect the human-computer interaction system with the electrical equipment to control the operator to complete the task. The other is a device that transmits information to the auxiliary tools, such as sensors and controllers, to form a control system. The driving mechanism of construction machinery is composed of a motor, a chain wheel transmission device and a driving system (as shown in Figure 1). In a factory, workers use machines to work, usually for two purposes. The first is to do some auxiliary operations to complete the scheduled tasks, and the second is to enable the robot to achieve the required functions or motion

tracks according to requirements, that is, to change the position of the workpiece through operation and change the time to achieve automatic production process [9-10].

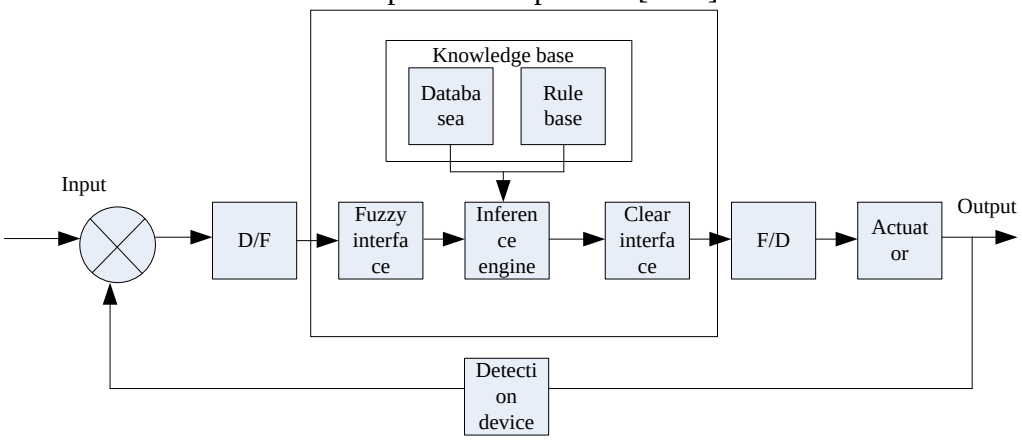

Figure 1. Construction machinery and electric motor operation

2.2. Intelligent Optimization Control Strategy

Intelligent optimization algorithm refers to determining the optimal scheme according to the change rule of the relationship between the studied objects (such as genetic factors) through the analysis of input and output information in the system [11-12]. The following issues shall be considered in controller design. First, select a suitable parameter value, then calculate the optimal solution set of the functional relationship between the parameter and the global variable to carry out the control operation, finally, further modify the optimization results according to the specific situation until convergence, and keep cycling throughout the process to ensure that the system can meet certain requirements. Genetic algorithm is a global search method, and its main functions are as follows: first, select and reorganize cross descendants, and second, solve the optimal solution [13-14]. In practical application, we know that gene coding string cannot directly affect the optimization performance of parameters. However, due to the complex and uncertain process of genetic evolution and its self-organizing ability, it has many shortcomings in solving dynamic programming problems - low optimization probability and slow convergence speed. Figure 2 is an intelligent dynamic model.

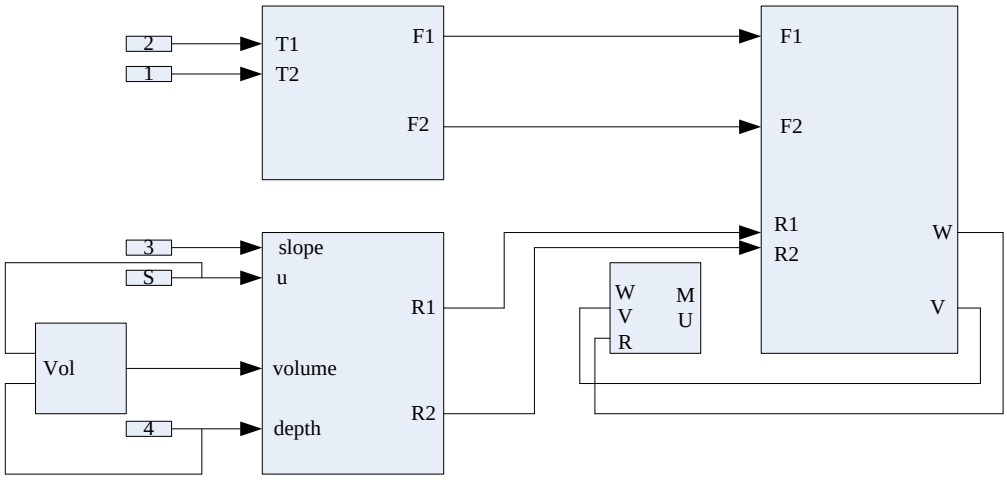

Figure 2. Intelligent kinetic model

The algorithm is heavily dependent on the initial population, and is prone to fall into premature or local optimum, etc. The core of genetic evolutionary algorithm is natural selection and population genetics. When it optimizes the problem, it only requires that the initial solution can adapt to a certain range of environments. However, there will be many uncertainties in actual production activities. First, some populations have a large number of individuals with strong diversity, and second, some specific groups may have some excellence [15-16]. The main characteristic parameters of the motor include the rated power Pm of the motor_ Rae, rated speed nm_ Yae, peak power Pm_ Max Maximum speed nm ma and peak torque Tm_ max.

(1) Maximum speed nm_ max

$$n_{m_max} = i_M \, v_{max} / 0.12\pi r_d \tag{1}$$

Where, ymax. - The maximum speed of bulldozer under non-operating conditions is 11km/h; Iw - transmission ratio of final drive mechanism, taking 28.336; r - dynamic radius of driving wheel, taking 0.46831m.

(2) Rated speed of motor nm_ rate

$$n_{m_rate} = n_{m_max} / \beta \tag{2}$$

Where, β- Weak magnetic diffusion multiple. β If it is too small, the rated torque, rotor current, internal loss, motor size and quality are large; β If the transmission ratio is too large, the torque of the drive shaft and the gear stress will increase. Take 5 here.

2.3. Effect of Genetic Algorithm on Motor and Machine

For traditional PID control strategy, its main feature is that empirical formula method and mathematical method are used to determine parameters and evaluate algorithm performance. This method is easy to fall into local convergence or prematurely terminate state, leading to system oscillation and even serious distortion [17-18]. The traditional solution space cannot completely guarantee that every individual can find an optimal solution. Therefore, it is necessary to use some iterative methods to make the optimal solution set consistent with the global optimal set in order to obtain satisfactory results, and genetic algorithm can overcome this shortcoming. In practice, there are many selection mechanisms, including natural elimination, survival of the fittest and fitness. These factors have a great influence on the operation of motor and machine. Among them, the most important is the relationship between the population optimization problem and evolution factors. The population evolves from a few individuals to multiple arrays, while competition is a "winner" selection method - to obtain better results through constant cross mutation (that is, to randomly find excellent candidates in the optimal solution space), and to push the eliminated to a higher level to continue to maintain the original state. Genetic algorithm optimizes the process of motor machine, initialization, objective function value and mutation probability, obtains the optimal solution, and converts it into a standard matrix. In the actual design, the most widely used "point axis" evolutionary theory is used to set the parameters. However, because both encoding and decoding have gene feature information (i.e., the chromosomes have the same or similar degree) and the space required by the corresponding problem is inconsistent and discontinuous, and easy to cross, overlap and mutate, it is necessary to recalculate the initialized optimal solution. In the genetic algorithm, the working environment of the motor is optimized, which is divided into two parts. The first is the simulation system. The second is digitalization. The former is to design the initial solution from the research object itself. The latter takes into account the nature of the problem,

which causes new problems after the change of the fitness function value, so that the global optimal solution can be realized. In the optimization problem of genetic algorithm, the selection of initial population is very important. If the population size is too large, it will lead to low search efficiency. In practical applications, we generally use evolutionary operations to solve.

3. Experimental Process of Machine Optimal Control Strategy of Construction Machinery Motor Considering Genetic Algorithm

3.1. Construction Machinery Motor Machine Control Model Based on Genetic Algorithm

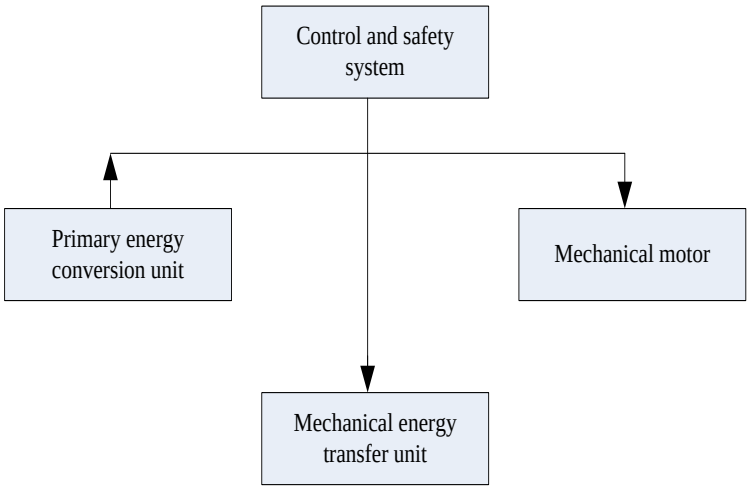

Figure 3. Motor machine control model

The optimal control of construction machinery motor machine is a complex and systematic process, which requires the comprehensive use of various theories and methods to analyze, research and design it. The optimal solution or selection is realized based on the principle of natural evolution. In practice, the most widely used are random search strategy and local search strategy. Compared with other optimization problems, they consider their own factors more to determine the best solution. However, in some special cases, they are not suitable for global optimization algorithms but only applicable to systems in some regions. In the research of genetic evolutionary algorithm, the most important thing is how to build a suitable control mathematical model. In the practical application process, we can achieve the optimal solution by establishing an appropriate multi-objective function. But in the ideal state, the system is often not fully applicable to all situations. Therefore, when designing optimization problems to achieve the best performance index, it is necessary to analyze and model the controlled object to obtain satisfactory results. At the same time, it is necessary to ensure that the controller has good characteristics to make the algorithm more efficient and accurate to converge to the global optimal value (such as the termination time of the minimum search process). The position control of construction machinery motor is to use sensors to collect the rotor speed signal of the motor, and input the obtained digital quantity into the microcontroller through A/D converter to process and calculate the corresponding value. When the construction machinery starts, the PLC will judge the motor running state. After a certain setting is determined, the system (as shown in Figure 3) will send different control commands according to the solenoid valve opening and electromagnet magnetic circuit switch signals.

3.2. Performance Test of Construction Machinery Motor Machine Control Model Based on Genetic Algorithm

The performance test of the optimal control model of construction machinery motor includes the analysis of the time consumption between the objective function value and the actual system output result. First, the designed genetic algorithm is used to solve the variable values and constraint parameters of each joint, and then other constraint conditions such as joint angle, rotation speed and position are determined after the experimental results are obtained. Finally, the final optimal solution is calculated according to the above process and feedback is given to the designer. In this loop, it should be noted that if there is a discontinuity, the derivative of its function cannot be directly analyzed and optimized, otherwise the convergence of the entire algorithm will be affected. In order to obtain an accurate and objective function solution or approximate optimal value, an appropriate coding method is designed to control the target variable to achieve global optimization. Therefore, it is necessary to first verify whether the encoder converges to local search or produces the optimal performance index, and then find the most appropriate genetic operator and selection method by analyzing the sensitivity of algorithm parameters and determine the maximization of system gain.

4. Experimental Analysis of Optimal Control Strategy of Construction Machinery Motor Considering Genetic Algorithm

4.1. Performance Test and Analysis of Construction Machinery Motor Machine Control Model Based on Genetic Algorithm

Table 1 shows the test data of the machine control model of the construction machine motor.

Table 1. Performance test of the electric motor device control model

Test model	Target function calculation time(s)	Actual system output result time (s)	Optimize the control rate(%)	Is it compatible with the platform
The Control and Security System	5	3	98	Yes
Primary energy conversion unit	7	5	94	Yes
Power generation unit	5	3	96	Yes
Mechanical motor	4	4	93	Yes

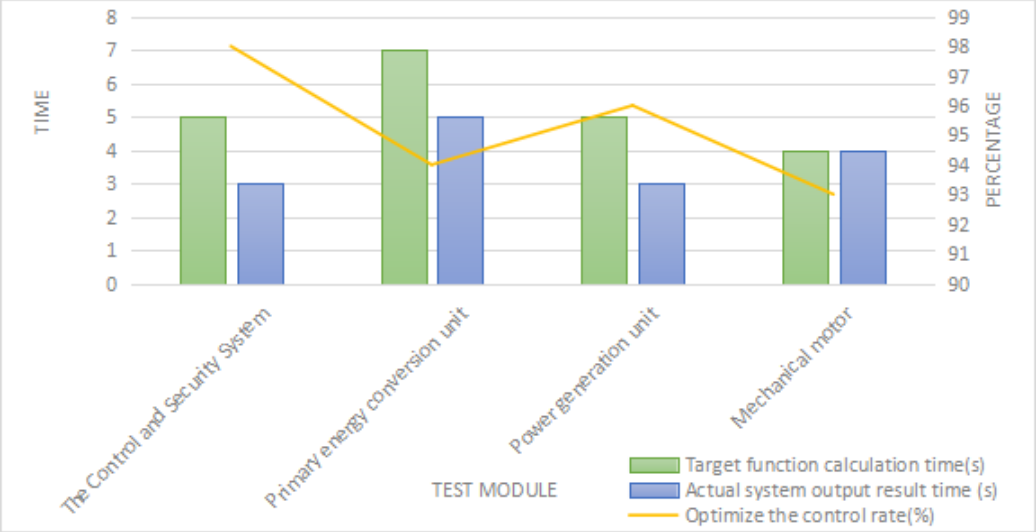

Figure 4. Model performance test

The performance test of construction machinery motor machine control model is mainly to simulate its performance, observe whether the system operates, and compare with that before optimization. The simulation results in Figure 4 show that the genetic algorithm can get an optimal solution when setting PID parameters, and the time to find the global optimal value is fast. However, the design and improvement of genetic algorithm requires a lot of calculation to determine the most reasonable and efficient scheme or control strategy. Because simulation test is a non-real-time work, it cannot be guaranteed that it will be compared and analyzed with that before optimization.

5. Conclusion

Genetic algorithm, random search and evolutionary logic are hot spots in the field of artificial intelligence research. They play a huge role in solving complex problems, but there are also some shortcomings, such as too small initial population is easy to fall into the local optimal solution space is not large enough and the convergence speed is slow. This paper introduces the combination of genetic operator and selection function method to design serial binary encoder, and optimizes it. In this paper, the traditional optimization method of genetic algorithm is described in detail from three aspects of motor position optimization, global search and local search, and it is proposed to replace the average with uniformity.

Funding

This article is not supported by any foundation.

Data Availability

Data sharing is not applicable to this article as no new data were created or analysed in this study.

Conflict of Interest

The author states that this article has no conflict of interest.

References

[1] *Elena L. Kulida:Genetic Algorithm for Solving the Problem of Optimizing Aircraft Landing Sequence and Times. Autom. Remote. Control. 83(3): 426-436 (2021). https://doi.org/10.1134/S0005117922030109*

[2] *A. Jameer Basha, S. Aswini, S. Aarthini, Yunyoung Nam, Mohamed Abouhawwash:Genetic-Chicken Swarm Algorithm for Minimizing Energy in Wireless Sensor Network. Comput. Syst. Sci. Eng. 44(2): 1451-1466 (2023).*

[3] *K. Jagadeesh, A. Rajendran:Improved Model for Genetic Algorithm-Based Accurate Lung Cancer Segmentation and Classification. Comput. Syst. Sci. Eng. 45(2): 2017-2032 (2023).*

[4] *yed Mahdi Homayouni, Dalila B. M. M. Fontes, José Fernando Gonçalves:A multistart biased random key genetic algorithm for the flexible job shop scheduling problem with transportation. Int. Trans. Oper. Res. 30(2): 688-716 (2023).*

[5] *M. Mythreyee, A. Nalini:Genetic Algorithm Based Smart Grid System for Distributed Renewable Energy Sources. Comput. Syst. Sci. Eng. 45(1): 819-837 (2023).*

[6] *Maryam Majidi, Rahil Mahdian Toroghi:A combination of multi-objective genetic algorithm and deep learning for music harmony generation. Multim. Tools Appl. 82(2): 2419-2435 (2023).*

[7] *Antonio Alexandre Moura Costa, Felipe Barbosa Araújo Ramos, Mirko Barbosa Perkusich, Ademar Franҫa de Sousa Neto, Luiz Silva, Felipe Cunha, Thiago Rique, Hyggo O. Almeida, Angelo Perkusich:A Genetic Algorithm-Based Approach to Support Forming Multiple Scrum Project Teams. IEEE Access 10: 68981-68994 (2021).*

[8] *Yang Cao, Wei Feng, Yinghui Quan, Wenxing Bao, Gabriel Dauphin, Yijia Song, Aifeng Ren, Mengdao Xing:A Two-Step Ensemble-Based Genetic Algorithm for Land Cover Classification. IEEE J. Sel. Top. Appl. Earth Obs. Remote. Sens. 16: 409-418 (2023).*

[9] *Nazeeh Ghatasheh, Ismail Al-Taharwa, Khaled Aldebei:Modified Genetic Algorithm for Feature Selection and Hyper Parameter Optimization: Case of XGBoost in Spam Prediction. IEEE Access 10: 84365-84383 (2021).*

[10] *Bahram Mahjoob Karambasti, Mohamad Naghashzadegan, Maryam Ghodrat, Ghadir Ghorbani, Roy B. V. B. Simorangkir, Ali Lalbakhsh:Optimal Solar Greenhouses Design Using Multiobjective Genetic Algorithm. IEEE Access 10: 73728-73742 (2021).*

[11] *Karima Khadir, Nawal Guermouche, Amal Guittoum, Thierry Monteil:A Genetic Algorithm-Based Approach for Fluctuating QoS Aware Selection of IoT Services. IEEE Access 10: 17946-17965 (2021).*

[12] *Pintu Kumar Ram, Pratyay Kuila:GAAE: a novel genetic algorithm based on autoencoder with ensemble classifiers for imbalanced healthcare data. J. Supercomput. 79(1): 541-572 (2023).*

[13] *Elena L. Kulida:Genetic Algorithm for Solving the Problem of Optimizing Aircraft Landing Sequence and Times. Autom. Remote. Control. 83(3): 426-436 (2022).*

[14] *Zahra Fattahi, Javad Behnamian:Location and transportation of intermodal hazmat considering equipment capacity and congestion impact: elastic method and sub-population genetic algorithm. Ann. Oper. Res. 316(1): 303-341 (2022).*

[15] *Manuel Luna, Ignacio Llorente, Angel Cobo:Determination of feeding strategies in aquaculture farms using a multiple-criteria approach and genetic algorithms. Ann. Oper. Res. 314(2): 551-576 (2022).*

[16] *Gagan Deep Singh, Manish Prateek, Sunil Kumar, Madhushi Verma, Dilbag Singh, Heung-No Lee:Hybrid Genetic Firefly Algorithm-Based Routing Protocol for VANETs. IEEE Access 10:*

9142-9151 (2021).

[17] Atefeh Taghavi, Reza Ghanbari, Khatere Ghorbani-Moghadam, Alireza Davoodi, Ali Emrouznejad:A genetic algorithm for solving bus terminal location problem using data envelopment analysis with multi-objective programming. Ann. Oper. Res. 309(1): 259-276 (2022).

[18] Li Li, Tian Qiu, Tichang Jia, Chen Chen:Stepping quantum genetic algorithm-based LQR control strategy for lateral vibration of high-speed elevator. Autom. 70(7): 623-634 (2022).