Scholar Publishing Group
Kinetic Mechanical Engineering
https://doi.org/10.38007/KME.2020.010204
ISSN 2790-2676 Vol. 1, Issue 2: 27-35

Improvement of Diesel Engine Cooling System Based on Deep Learning Algorithm

Marquez Julius

Institute for Applied Materials (IAM), Karlsruhe Institute of Technology (KIT), Kaiserstraße 12, D-76131 Karlsruhe, Germany

Keywords: Deep Learning, Diesel Engine, Cooling System, Improvement Plan

Abstract: The core idea of deep learning is to process input vectors and take their outputs as training samples, and then use classifiers to predict and modify these input features. When improving the existing diesel engine cooling system, we can use deep learning to solve the problem. Therefore, the purpose of this paper is to improve the design of diesel engine cooling system and improve the working efficiency. In this paper, the experimental method and comparison method are mainly used to build a diesel engine test bench. By setting the inlet water temperature of the diesel engine, the variation rules and influencing factors of the cooling water temperature and flow rate under three temperatures are analyzed. The experimental results show that when the inlet water temperature of the diesel engine is 90 ℃, the cooling water flow always takes the first place, which indicates that the diesel engine has good performance under this condition.

1. Introduction

With the development of industry, the performance of diesel engine has been continuously improved and higher and more stringent requirements have been put forward for the cooling system. Traditional methods are not accurate enough to adapt to the complex and changeable environment, so this paper starts to study the deep learning in the diesel engine cooling system and proposes an improved algorithm to improve the heat dissipation efficiency. The improvement of diesel engine cooling system is of great significance in improving diesel engine operation performance, reducing emissions, extending life cycle and optimizing energy consumption.

There are many theoretical researches on deep learning algorithm, and there are also many design and improvement of diesel engine cooling system. For example, some scholars have proposed a new method to diagnose the faults of the cooling system of the ship's main diesel engine by using an improved BP neural network [1-2]. Some scholars also believe that deep confidence networks (DBNs) are increasingly used in the engineering field [3-4]. Some scholars also said that the insufficient heat dissipation capacity of the water radiator and the small cooling water flow were

Copyright: © 2020 by the authors. This is an Open Access article distributed under the Creative Commons Attribution License (CC BY 4.0), which permits unrestricted use, distribution, and reproduction in any medium, provided the original work is properly cited (https://creativecommons.org/licenses/by/4.0/).

the main reasons for the high heat load of the heavy diesel engine [5-6]. Therefore, the deep learning algorithm can play a great role in the diesel engine cooling system, and its improvement is also worth further exploring.

In this paper, the cooling system of diesel engine is first studied, and its principle and composition are described. Secondly, the deep network improvement of deep learning is studied in depth, and the way of improvement is proposed. Then the three-dimensional computational fluid dynamics calculation of cooling water jacket is described. After that, the diesel engine cooling system was designed, and relevant experiments were carried out by building an experimental platform. Finally, through the analysis of experimental data, relevant conclusions are drawn.

2. Improvement of Diesel Engine Cooling System Based on Deep Learning Algorithm

2.1. Diesel Engine Cooling System

Generally, there are two types of cooling water systems for locomotive diesel engines: open type and closed type. Both systems have their own advantages and disadvantages in practical application. The open cooling system has the advantages of simple pipeline and equipment structure, convenient maintenance at ordinary times, low configuration costs, etc., but the cooling water in the open system will evaporate and needs to be constantly replenished. Because of its high cooling water temperature, the closed cooling reduces the temperature difference with the cooled parts, and the diesel engine has good economy. In addition, when the cooling water dissipates heat, the temperature difference between it and the air is large. When the heat dissipation is the same, the radiator area of the closed system is smaller than that of the open system, occupying less space. The cooling water used for diesel engines is required not only to have anti scaling and anti-corrosion properties, but also to have low toxicity or non-toxic additives, scale prevention, corrosion inhibition, no heat transfer hindrance and other properties [7-8].

The cooling water system shall meet the requirements for performance development test, mechanical development test, certification test and routine test of diesel engine. The design, function and performance of the cooling water system shall meet the technical requirements for diesel engine test.

The water jacket structure inside the diesel engine cylinder liner is relatively simple, while the cylinder head water jacket is more complex. Because the heat load of different areas is different when the diesel engine is running normally, it is unnecessary to reach a high flow rate in all areas, which will result in greater temperature difference and greater thermal stress. Therefore, different flow rates should be designed for different areas, such as areas with high heat load. Due to the complex internal structure, the coolant flow mode is also complex, mainly including longitudinal, transverse, mixed flow, etc. The coolant is divided into two parts at the water outlet of the water pump and flows to the cylinder liner and cylinder head respectively. This allows better cooling of the cylinder head and reduces the time that the coolant circulates inside the water jacket. In addition, when the engine is started, the coolant can be controlled to circulate in the water jacket, which can shorten the warm-up time [9-10].

2.2. Deep Network Improvement

Convolution neural network is the basis of many network frameworks for deep learning, so convolution is also one of the most important concepts in the field of deep learning. The convolution layer of deep learning is not equivalent to simple convolution calculation. Due to the

complexity of diesel engine cooling system, a large number of empirical formulas and estimated values need to be used in the design and calculation of intercooler and fresh water cooler, resulting in certain errors in the calculation results. Therefore, it is necessary to use existing technologies to improve computing power. With the in-depth learning training, the convolution kernel will extract more useful information from the image or feature map through autonomous adjustment, which is called feature learning [11-12].

The process of convolution calculation is a process of constantly extracting the edge information of samples, and also a process of continuously abstracting and expressing the features of samples. From the perspective of physical meaning, convolution computation is also a feature representation learning. With the increase of the depth of convolution layer, the edge information of samples is expressed more clearly layer by layer. From this analysis, it can be seen that the feature expression learning and convolution algorithm of clustering algorithm are the extraction of sample edge information. In the process of deep learning network optimization, loss function E (x) plays an important role. The goal of deep network training is to maximize (or minimize) E (x) through effective training mode. The accuracy of training mainly includes the design of E (x) and initialization of internal parameters of the model [13-14]. The function of gradient descent is to find the minimum value, control the variance, update the model parameters, and finally make the model converge:

$$\lambda = \lambda - \sigma \cdot \nabla(\lambda) \times P(\lambda; m_i; n_i) \tag{1}$$

Among them, m_i and n_i are training samples.

The adaptive time estimation method can calculate the adaptive learning rate of each parameter. Where X (s) is the average of the gradient and W (s) is the non-central variance of the gradient. The formula is as follows:

$$\hat{X}_s = \frac{X_s}{1-\alpha_1^s},\ \hat{W}_s = \frac{W_s}{1-\alpha_2^s} \tag{2}$$

Among them, 9/10 is set by α_1 and 99/100 is set by α_2. Its convergence speed is faster and the learning effect is more effective.

The results obtained by clustering algorithm can assist depth learning in algorithm optimization. By learning the feature expression of clustering algorithm, we can get the convolution parameter setting of convolution neural network and the feature expression of clustering algorithm. By combining the feature expression of clustering algorithm with the convolution result, the starting point of random optimization can be closer to the local optimal solution in the process of deep network training [15-16].

2.3. Three Dimensional Computational Fluid Dynamics Calculation of Cooling Water Jacket

In the three-dimensional simulation analysis of the engine cooling water chamber, it is considered that the cooling water is an incompressible continuous medium. When solving, the flow and heat transfer are governed by the three conservation laws of physics. The flow uniformity of the cooling water chamber of the diesel engine has an important impact on the working uniformity of each cylinder of the diesel engine. Therefore, it is very necessary to improve the flow uniformity of the body water chamber, improve the cooling effect of the cylinder liner, and make its heat transfer uniform [17-18].

The cooling water jacket model is extracted from the three-dimensional engine model by Hypermesh software. As 3D CFD calculation focuses on the heat dissipation capacity of engine cooling water jacket, the cooling water jacket model used for calculation does not include radiator and water pump.

The fluid solid coupling method has great advantages for this problem of solid fluid interaction. In addition to calculating the two as a whole, it can also directly map the temperature boundary of the fluid part to the solid domain as the boundary condition of the solid part. This method is more consistent with the actual situation and more accurate for the changing boundary. This method can more accurately simulate the temperature field inside the solid and is more reasonable. Single cylinder water jacket mainly includes three parts: cylinder jacket water jacket, fire shore water jacket and cylinder head water jacket. The single cylinder water jacket is meshed by ICEM. Before establishing the fluid structure coupling model of single cylinder, each part shall be simplified appropriately. Coolant is one of the main ways to reduce the heat load of diesel engine, which can take away a lot of heat. Because the internal surface of the cooling water is complex, in order to meet the cooling effect, the flow rate is different in different places, so the heat transfer coefficient in different places will also be very different. When setting the boundary conditions of the fluid domain, it mainly includes the pressure and velocity of the inlet and outlet, as well as the temperature boundary conditions of the coolant. The boundary conditions in the solid domain are relatively complex, mainly including the outer surface of the cylinder head, the fire surface, the intake port, the exhaust passage, the water chamber wall of the cylinder head and the cylinder liner.

2.4. Design of Diesel Engine Cooling System

The heat exchanger is the core of the diesel engine cooling system. The heat transfer capability of the heat exchanger is one of the decisive factors for the performance of the diesel engine cooling system. The design and calculation of the heat exchanger generally take the parameters under the maximum power working condition of the diesel engine as the original parameters for calculation, and comprehensively consider its working environment and operating requirements. Because of the strong scaling property of sea water, it flows in the tube side. The diesel engine coolant is relatively clean and flows in the shell side.

When designing the central cooling system of the main engine, it is first required to consider that it can meet the basic requirements of the ship power plant for the cooling water system. That is, to ensure that the main engine and its auxiliary equipment can be properly and reliably cooled within the entire working range. On this basis, the economy of the system is evaluated to select the best scheme.

To optimize the design, first convert the physical model into a mathematical model, and then select an appropriate solution method according to the characteristics of the mathematical model to calculate and solve it to obtain the optimal solution.

3. Design of Diesel Engine Test Bench Based on Cooling Water Temperature

3.1. Construction of Diesel Engine Test Bench

The purpose of diesel engine thermal balance is to obtain engine parameters. The diesel engine test bench can measure the performance parameters of the diesel engine, such as power, torque, fuel consumption, emissions and smoke. The diesel engine power, fuel consumption, smoke and emissions are measured on the test bench. In the diesel engine test, the perfection of the bench, the

accuracy of the instrument and the sensitivity of the sensor are directly related to the accuracy of the diesel engine test results. This paper adopts EST-5000 automatic diesel engine test bench, which has the advantages of high precision, reliable operation, sensitive response, etc.

3.2. Data Acquisition System and Diesel Engine Cooling Device

The increasingly complex test content and object, and the increasingly strengthened test intensity put forward higher requirements for the test accuracy and speed. With the computer as the main core, through program control, it can automatically complete complex detection tasks. This system is called automatic test system. Its basic principle is shown in Figure 1:

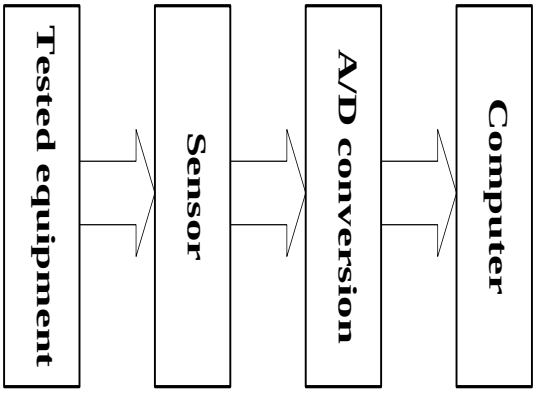

Figure 1. Principles of the automatic test system

In this experiment, an exhaust gas meter is used to measure diesel engine exhaust gas synchronously. The exhaust gas analyzer is sensitive and can monitor the exhaust gas emission status of diesel engine in real time. The diesel engine cooling water device is designed to ensure the normal operation of the diesel engine. SIMENS TD400C cooling water temperature regulating device is used for diesel engine in this test. The equipment is mainly composed of heat exchanger, PLC control system, expansion water tank, proportional control valve and pipeline.

3.3. Experimental Scheme

Different temperatures will inevitably cause changes in the pressure, temperature and flow of cooling water in the cooling system, which will directly affect the heat distribution of the diesel engine. The cooling water in this paper uses ethanol as the cooling medium, because ethanol has a high boiling point. Through the heat balance test of diesel engine, the change rule of temperature, flow and pressure of cooling water of diesel engine is studied when the inlet water temperature is 90 ℃, 95 ℃ and 100 ℃, and the rotational speed is negative. The cooling parameters in the cooling system mainly include the pressure, flow and temperature of cooling water.

4. Effect of Temperature on Cooling Water Parameters

4.1. Effect of Load on Cooling Water Flow at Different Temperatures

The change of cooling water flow will directly affect the performance of diesel engine cooling system. The increase or decrease of flow directly affects the change of cooling water temperature. When the speed is 1800r/min and the inlet water temperature is 90 ℃, 95 ℃ and 100 ℃, the impact

of load on the cooling water flow diagram is shown in Table 1:

Table 1. Water flow of diesel engine at different temperatures

	90℃	95℃	100℃
10%	120.5	104.6	73.4
20%	119.1	105.0	79.7
40%	127.2	111.3	94.2
60%	126.9	110.6	97.1
80%	127.1	119.1	117.4
100%	127.2	121.6	112.7

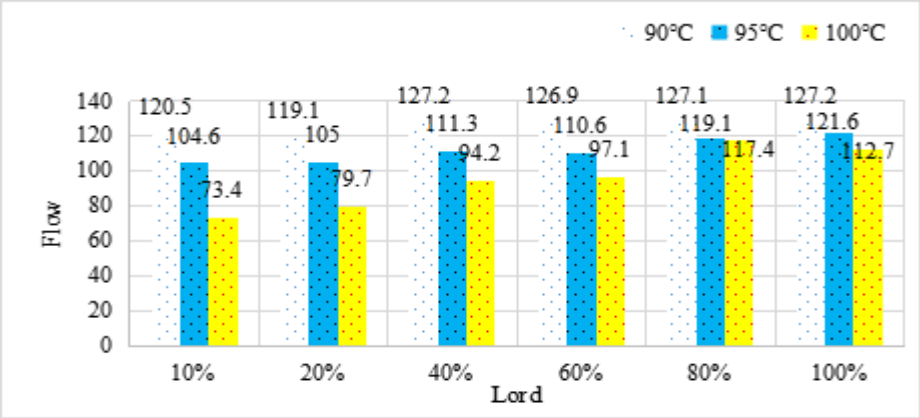

Figure 2. Water flow of diesel engine at different temperatures

As shown in Figure 2, we can see that with the increase of the temperature of the diesel engine water inlet, the excessive water temperature in the diesel engine cooling system will cause steam resistance, resulting in a reduction of the flow at the diesel engine water outlet. In addition, with the increase of inlet water temperature, the cooling water of diesel engine has less and less heat dissipation.

4.2. Effect of load On Cooling Water Temperature at Different Temperatures

The temperature of cooling water reflects the cooling performance of the diesel engine cooling system, and directly reflects the heat distribution of the diesel engine. The temperature directly affects the fuel consumption and emission performance of the diesel engine. Set the rotation speed at the torsion point to 1800r/min, and increase the load from 10% to 100% by 10%. Record the temperature data when the inlet temperature of cooling water is 90 ℃, 95 ℃ and 100 ℃. The outlet water temperature of diesel engine under load characteristics is shown in Table 2:

Table 2. Water inlet temperature of diesel engine under load characteristics

	90℃	95℃	100℃
10%	90	95.3	100.2
20%	90.2	95.2	99.9
40%	89	95.2	100
60%	90.3	95.1	100
80%	90.4	95.1	100.7
100%	90.4	95.3	99.8

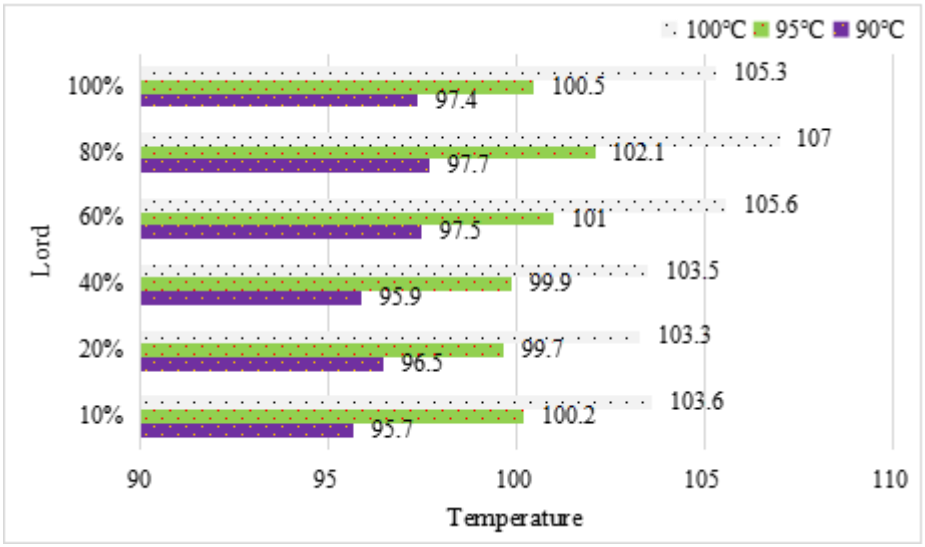

Figure 3. Water outlet temperature of diesel engine under load characteristics

As shown in Figure 3, we can find that the higher the temperature of diesel engine cooling water, the higher the outlet water temperature. On the contrary, the lower the cooling water temperature, the lower the outlet water temperature. Moreover, according to the temperature change of different loads, we can find that the change trend of different cooling water temperature under different loads is basically consistent.

5. Conclusion

Artificial neural network is to process data by a large number of neurons simulating human neural system, rather than relying on mechanical learning algorithm to extract some basic features and laws. Deep learning is improved on the traditional neural network. Its advantage is that it can combine different kinds of neurons through training sets, so that various nonlinear problems in complex systems can be effectively solved. This paper introduces the composition and working principle of the diesel engine cooling system. Then, the scheme of engine water circulator and cylinder temperature monitor is designed, and the diesel engine test bench is improved. Finally, it is found through experiments that the temperature change of the recording implementation is closely related to its function.

Funding

This article is not supported by any foundation.

Data Availability

Data sharing is not applicable to this article as no new data were created or analysed in this study.

Conflict of Interest

The author states that this article has no conflict of interest.

References

[1] *Byung Mo Kim, Sung Jin Yoo: Approximation-Based Adaptive Control of Constrained Uncertain Thermal Management Systems With Nonlinear Coolant Circuit Dynamics of PEMFCs. IEEE Access 8: 83483-83494 (2020). https://doi.org/10.1109/ACCESS.2020.2992047*

[2] *Halil Ibrahim Akolas, Aliriza Kaleli, Kadir Bakirci: Design and Implementation of an Autonomous EGR Cooling System Using Deep Neural Network Prediction to Reduce Nox Emission and Fuel Consumption of Diesel Engine. Neural Comput. Appl. 33(5): 1655-1670 (2020). https://doi.org/10.1007/s00521-020-05104-1*

[3] *Aliriza Kaleli: Development of On-Line Neural Network Based Adaptive Fractional-Order Sliding Mode Robust Controller on Electromechanically Actuated Engine Cooling System. J. Syst. Control. Eng. 236(3): 505-517 (2020). https://doi.org/10.1177/09596518211048033*

[4] *Lubnnia Souza, Kádna Camboim, Fernanda M. R. Alencar: a Systematic Literature Review about Integrating Dependability Attributes, Performability and Sustainability in the Implantation of Cooling Subsystems in Data Center. J. Supercomput. 78(14): 15820-15856 (2020). https://doi.org/10.1007/s11227-022-04515-2*

[5] *Subhash Chandra, Arvind Yadav, Mohd Abdul Rahim Khan, Mukesh Pushkarna, Mohit Bajaj, Naveen Kumar Sharma: Influence of Artificial and Natural Cooling on Performance Parameters of a Solar PV System: A Case Study. IEEE Access 9: 29449-29457 (2020). https://doi.org/10.1109/ACCESS.2020.3058779*

[6] *Mohd Seraj, Syed Mohd Yahya, Mohd Anas, Agung Sutrisno, Mohammad Asjad: Integrated Taguchi-GRA-PCA for Optimising the Heat Transfer Performance of Nanofluid in an Automotive Cooling System. Grey Syst. Theory Appl. 11(1): 152-165 (2020). https://doi.org/10.1108/GS-09-2019-0036*

[7] *Mohamed Kebdani, Geneviève Dauphin-Tanguy: Dynamic Bond Graph Modelling of a Two-Phase Cooling System with Experimental Analysis. Int. J. Simul. Process. Model. 16(2): 79-89 (2020). https://doi.org/10.1504/IJSPM.2020.115856*

[8] *S. Kudiyarasan, P. Sivakumar, K. Balachandran: Innovative Design and Implementation of Jet Cooling of Large UPS Powered Systems in Nuclear Power Plant. IEEE Trans. Ind. Electron. 68(5): 3813-3819 (2020). https://doi.org/10.1109/TIE.2020.2985005*

[9] *Seho Park, Changsun Ahn: Model Predictive Control with Stochastically Approximated Cost-to-Go for Battery Cooling System of Electric Vehicles. IEEE Trans. Veh. Technol. 70(5): 4312-4323 (2020). https://doi.org/10.1109/TVT.2020.3073126*

[10] *Peter A. Lindahl, Muhammad Tauha Ali, Peter Armstrong, Andre Aboulian, John S. Donnal, Les Norford, Steven B. Leeb: Nonintrusive Load Monitoring of Variable Speed Drive Cooling Systems. IEEE Access 8: 211451-211463 (2020). https://doi.org/10.1109/ACCESS.2020.3039408*

[11] *Yanki Aslan, Jan Puskely, Antoine Roederer, Alexander Yarovoy: Trade-Offs Between the Quality of Service, Computational Cost and Cooling Complexity in Interference-Dominated Multi-User SDMA Systems. IET Commun. 14(1): 144-151 (2020). https://doi.org/10.1049/iet-com.2019.0206*

[12] *Alberto Pajares, Xavier Blasco Ferragud, Juan M. Herrero, José Vicente Salcedo: Analyzing the Nearly Optimal Solutions in a Multi-Objective Optimization Approach for the Multivariable Nonlinear Identification of a PEM Fuel Cell Cooling System. IEEE Access 8: 114361-114377 (2020). https://doi.org/10.1109/ACCESS.2020.3003741*

[13] *Ayman Altameem, Basetty Mallikarjuna, Abdul Khader Jilani Saudagar, Meenakshi Sharma,*

Ramesh Chandra Poonia: Improvement of Automatic Glioma Brain Tumor Detection Using Deep Convolutional Neural Networks. J. Comput. Biol. 29(6): 530-544 (2020). https://doi.org/10.1089/cmb.2020.0280

[14] Jaison Paul Mulerikkal, Sajanraj Thandassery, Vinith Rejathalal, Deepa Merlin Dixon Kunnamkody: Performance Improvement for Metro Passenger Flow Forecast Using Spatio-Temporal Deep Neural Network. Neural Comput. Appl. 34(2): 983-994 (2020). https://doi.org/10.1007/s00521-021-06522-5

[15] Damien Robissout, Lilian Bossuet, Amaury Habrard, Vincent Grosso: Improving Deep Learning Networks for Profiled Side-channel Analysis Using Performance Improvement Techniques. ACM J. Emerg. Technol. Comput. Syst. 17(3): 41:1-41:30 (2020). https://doi.org/10.1145/3453162

[16] Rohit Singh, Deepak Saluja, Suman Kumar: Reliability Improvement in Clustering-Based Vehicular Ad-Hoc Network. IEEE Commun. Lett. 24(6): 1351-1355 (2020). https://doi.org/10.1109/LCOMM.2020.2980819

[17] Rasheed el-Bouri, David W. Eyre, Peter J. Watkinson, Tingting Zhu, David A. Clifton: Hospital Admission Location Prediction via Deep Interpretable Networks for the Year-Round Improvement of Emergency Patient Care. IEEE J. Biomed. Health Informatics 25(1): 289-300 (2020). https://doi.org/10.1109/JBHI.2020.2990309

[18] Venkataraman Santhanam, Larry S. Davis: A Generic Improvement to Deep Residual Networks Based on Gradient Flow. IEEE Trans. Neural Networks Learn. Syst. 31(7): 2490-2499 (2020). https://doi.org/10.1109/TNNLS.2019.2929198