Scholar Publishing Group
Kinetic Mechanical Engineering
https://doi.org/10.38007/KME.2022.030307
ISSN 2790-2676 Vol. 3, Issue 3: 54-61

Teaching Methods of Power Mechanical Engineering Based on Artificial Intelligence

James Yong Liao*

Philippine Christian University, Philippines

James.liaoyong@pcu.edu.ph

**corresponding author*

Keywords: Artificial Intelligence, Power Mechanical Engineering, Teaching Reform, Teaching Platform

Abstract: Artificial intelligence(AI) has gradually penetrated into the field of education and teaching, is profoundly changing classroom teaching methods, and has become the core power of classroom revolution. How to conform to the requirements of the times, promote the integration of AI and teaching, properly understand the key technologies of AI, and effectively apply them to teaching is an urgent need of teaching reform. However, from the present situation of AI applied to the teaching of power mechanical engineering(PME), there are some problems such as teachers' lack of general knowledge of AI technology and low functional utilization rate. Therefore, this paper takes AI as a breakthrough, establishes a teaching platform for the integration of AI and PME teaching, and analyzes teachers' cognition of AI and the teaching application of AI products, which has far-reaching theoretical significance for promoting the integration of AI and teaching.

1. Introduction

Compared with the traditional field, the development of engineering in the computer field is relatively changing with each passing day. For the increasingly complex technology and sustainable development, the education and teaching of PME is also facing unprecedented challenges. If the past theoretical education mode continues to be used, it will inevitably lead to the decline of students' comprehensive application ability of power mechanical system. In addition, the demand of enterprises for mechanical engineering application talents is increasing, so we urgently need to improve the quality and connotation of engineering education.

The interpretation of AI teaching ideas at home and abroad has been deeply and comprehensively studied, and the implementation of AI teaching ideas in today's information-based teaching is ensured through appropriate ways. Some researches think that the key technologies of

Copyright: © 2022 by the authors. This is an Open Access article distributed under the Creative Commons Attribution License (CC BY 4.0), which permits unrestricted use, distribution, and reproduction in any medium, provided the original work is properly cited (https://creativecommons.org/licenses/by/4.0/).

AI include data mining and learning, expert system, and human-computer interaction, and their key technologies are different in composition or representation in different fields. The key technology based on the factors such as teaching tasks and needs is the foundation and core function embodiment of the application of AI in teaching [1]. From the role of AI in teaching, the key technologies are summarized. Some scholars think that the key components of AI in teaching application are machine learning and deep learning as the underlying technologies, speech recognition and affective computing technology serving individual characteristics, natural language processing technology serving content and adaptive learning technology serving behavior [2]. Other researchers believe that machine learning and deep learning, through data mining and analysis, make the core algorithm and data guarantee of intelligent teaching [3]. In recent years, the research on the application of AI in teaching is hot, but there are not many applied research results with high quality, reference and convenient operation. Although there are a lot of researches on AI teaching, most of them are based on the concept of AI, and there are few systematic researches that can effectively guide teachers' behavior and apply AI to teaching.

In this paper, several key technologies of AI are introduced, and the teaching significance of these technologies is analyzed. Then, an experimental platform suitable for the teaching of PME is built with the help of AI. Finally, by investigating the present situation of teachers' application of AI teaching products in the teaching of related courses of PME, the research and analysis of AI promoting teaching reform are carried out.

2. Key Technologies of AI and its Teaching Significance

(1) Machine learning and deep learning and their teaching significance

Machine learning is a process that allows machines to mine and analyze a large number of data acquisition rules through algorithms, and to predict behaviors and patterns [4]. Deep learning is to improve the accuracy of classification or prediction on the role of machine learning. Applying machine learning and deep learning to teaching, analyzing teaching-related data, obtaining complex and abstract teaching information from it, so as to predict students' performance and behavior, help educators master students' learning situation, intelligently obtain accurate teaching feedback, discover teaching rules, provide adaptive content, realize personalized and accurate teaching, promote teaching reflection and improve teaching representation [5]. At the same time, the huge and complex teaching data is difficult to collect and store, so it is necessary to ensure the truthfulness, integrity, sharing and standardization of the data in the process of technology application, and to ensure the effectiveness of data analysis [6].

Machine learning includes SVM, KNN, decision tree and other algorithms, while deep learning includes neural network, transfer learning and other methods. KNN is a common weight increasing method in machine learning, and Euclidean distance or Manhattan distance is used to measure the distance between objects [7]. The calculation formula is as follows:

$$d1=\sqrt{\sum_{k=1}^{n}(x_k-y_k)^2} \tag{1}$$

$$d2=\sum_{k=1}^{n}\left|x_k-y_k\right| \tag{2}$$

Where d1 represents Euclidean distance and d2 represents Manhattan distance. X, y represent objects.

(2) Natural language processing and its teaching significance

Natural language processing is the input, output, recognition, understanding and processing of information such as form, sound and meaning, which completes man-machine interaction. Such technologies as speech recognition and synthesis system, concept visualization, corpus and its retrieval tools, automatic test question generation tools, e-book bags, etc [8]. The application of this technology can improve the speed and accuracy of teaching detection, reduce the burden of teachers from repetitive work, and promote the improvement of teachers' professional ability. Break through the virtual space barrier and realize the dialogue between teachers and students. However, the application of natural treatment technology in teaching can only assist teachers to complete teaching tasks, but can not completely replace teachers [9].

(3) Emotional calculation and its teaching significance.

Get people's emotional information through emotional calculation, and realize visualization of emotional state. Emotional computing is applied in teaching, which can intelligently identify students' facial expressions, and judge and analyze students' implicit emotional information, so as to obtain and understand students' emotions. On the one hand, it can judge students' concentration, monitor and warn students' learning behaviors, and provide reliable basis for teachers' teaching strategy adjustment; on the other hand, it can provide students with emotional incentives in time, realize emotional interaction and care in virtual space, and stimulate students' learning enthusiasm [10-11]. However, emotional information is rich, subtle and complex, so teachers need to make judgments based on technology and students' characteristics before making decisions.

3. Teaching Platform of PME Based on AI

3.1. Development Technology and Related Tools

The development language is C#. # C language is simple and easy to learn, with low basic requirements for users and powerful functions. # C language is developed from C language and C++ language, so on the one hand, it has object-oriented advantages such as polymorphism and inheritance, on the other hand, it is improved on the basis of them, and the grammar becomes simple and direct [12-13]. Therefore, programming in C# language is more efficient.

The user interface framework adopts WPF form. WPF is a new generation graphic display system, which provides a common description and operation method for user interface, documents, 2D/3D graphic animation and media, and designs a unified solution for application development. At the same time, WPF forms can meet the basic engineering software development of three-dimensional display, text, controls and other functions [14].

The system is applied to 3ds MAX modeling tool, and the basic 3D model is established, so that students can observe from multiple angles and study deeply. Expression Blend design tool, which renders the 3D model established by 3ds MAX and imports it into WPF form [15].

3.2. The Overall Structure Design of the Test Bench

The mechanical engineering test bench is mainly composed of three different modules: signal generator, data acquisition device and data analysis and display device. According to the common requirements of existing equipment and power machinery system engineering practice, three physical quantities (sound, force and temperature) commonly used in engineering are selected as experimental objects, and the signals generated by these three physical quantities (acoustic emission signal, force signal and temperature signal) are collected, analyzed and processed [16]. The data

acquisition module mainly consists of acoustic emission acquisition unit (AE sensor, preamplifier, data acquisition card), force acquisition unit (force sensor, data acquisition card) and temperature acquisition unit (thermocouple, temperature acquisition module). The data analysis and display module is based on Labview software, and uses the abundant signal processing tools provided by the software to realize high-pass and low-pass filtering of signals, so as to obtain accurate signals and display all kinds of signals. The mechanical device module is mainly composed of acoustic emission signal source device, pressure signal source device and temperature signal source device [17-18]. Detailed information flow of mechanical engineering test bench is shown in Figure 1.

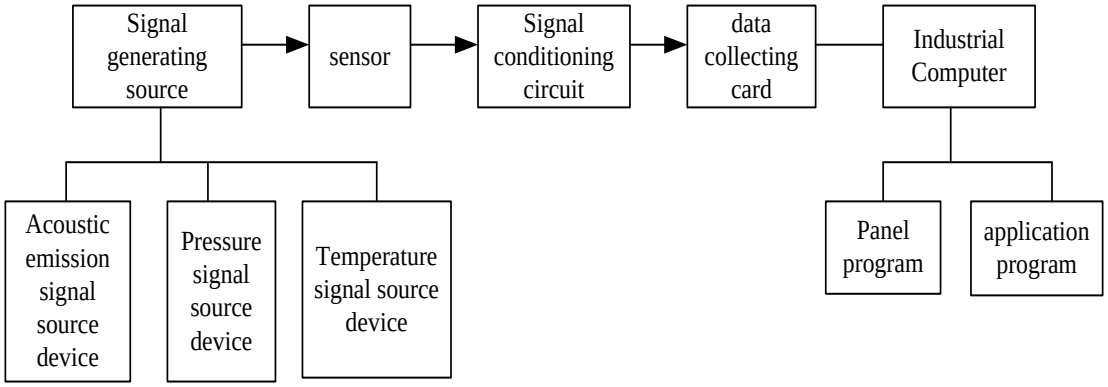

Figure 1. Test bench for PME

3.3. New Module Design

In order to increase the use function of the platform, some teaching-related contents, such as question bank exercises, examination system and virtual practice, have been added to the system, thus making the teaching function of the platform stronger. The new module focuses on the training of homework in the course teaching process, and increases the resources of students' independent practice, so as to digest classroom knowledge. Mechanical engineering is an applied course. Generally, a one-week course design should be arranged for this course, and the corresponding field practice should be arranged for the course design. However, due to the influence of class hours, this link can hardly be realized. Most students only stay at the level of theoretical knowledge and have no field experience. In order to fill this gap, virtual practice is set up, so that students can understand the basic content of mechanical engineering application and the corresponding engineering technology.

4. Application Analysis of AI Products in PME Teaching

4.1. The Status Quo of Teaching Application of AI Technology

AI is the bottom technology to realize intelligent products, and intelligent products are the realistic carriers of AI. A full understanding of AI will help teachers fully understand the functions of intelligent products and guide teachers to apply intelligent teaching products. At present, many concepts of AI are professional concepts, such as deep learning. These concepts are clearly defined, and understanding them clearly is to guide the actual operation.

In this paper, 342 teachers who teach courses related to PME are investigated to find out their cognition of AI technology and the application of AI products. On this basis, the application of AI technology in PME teaching is explored and analyzed.

Table 1. Cognition of the composition of AI technology

	frequency	Percentage(%)
knowledge representation	72	21.05
Machine learning, deep learning	168	49.12
natural language processing	124	36.25
Emotional calculation	61	17.84
Don't understand	25	7.31

According to the survey results in Table 1, the number of teachers who know machine learning, deep learning, and natural language processing technology is large, with 49.12% and 36.25% respectively. Their cognitive level of AI technologies such as knowledge representation and emotion calculation is low, and 7.31% of teachers don't know the key technologies of AI.

Table 2. Usage of AI teaching products

	frequency Percentage(%)	
Intelligent teaching system	213	62.28
Smart campus platform	189	55.26
Intelligent correction	175	51.17
Intelligent answering	62	18.13
Educational robot	33	9.65

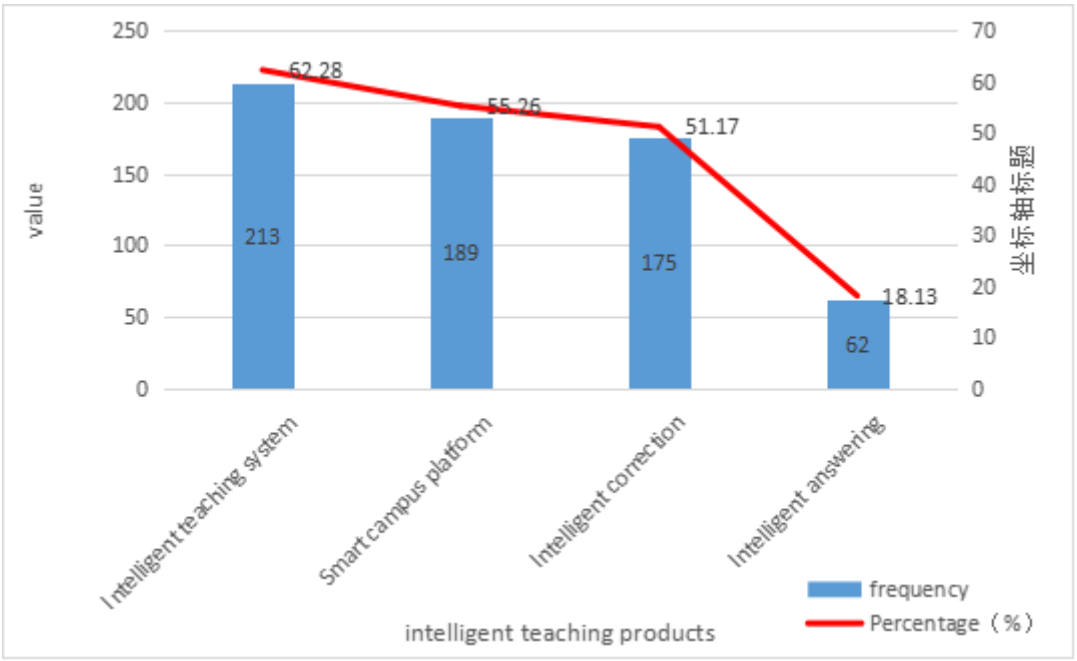

Figure 2. Teachers' use of AI teaching products

According to the survey results in Table 2 and Figure 2, most teachers often use intelligent products for teaching. In the survey of the use of intelligent products, only intelligent question answering and educational robot intelligent assistants have a low application rate. From the above results, it is known that intelligent teaching products have been widely used in the teaching of PME, and it will be an inevitable trend for teachers to use AI technology for teaching in modern teaching.

However, teachers' cognition of AI technology has not been popularized, and their cognitive level is at the level of only being familiar with intelligent products.

4.2. Application of AI in the Teaching Evaluation of PME

The key technology of AI is applied to the teaching evaluation of PME, which starts from data, goes deep into people's cognition, consciousness and emotion, revolves around classroom and evaluation, and extends to extracurricular activities and life, so as to realize digital, intelligent, accurate and systematic scientific and comprehensive teaching evaluation. Based on the investigation of the effect and behavior of teachers' teaching evaluation under the application of intelligent products, the present situation of the application of AI technology in the teaching evaluation of this course is known. The investigation results are as follows: 3.

Table 3. Application of AI in teaching evaluation reform

	Conformity	General conformity	Inconformity
Improve the accuracy of teaching evaluation	61.42%	32.24%	6.34%
Realize teaching evaluation	54.86%	36.73%	8.41%
Achieve personalized evaluation	45.30%	37.12%	17.58%
Pay attention to data evaluation	52.61%	41.47%	5.92%

As shown in Table 3, in terms of teaching evaluation, teachers apply key technologies of AI to make teaching evaluation tend to be scientific, accurate, comprehensive and efficient, which is embodied in collecting and analyzing teaching data through machine learning and deep learning technology, and improving the accuracy of teaching evaluation by quantifying data. In terms of comprehensiveness of teaching evaluation, besides data evaluation, natural language processing technology provides intelligent evaluation and standard consideration, and emotional computing technology realizes comprehensive evaluation of emotional attitude.

5. Conclusion

The teaching application of AI technology is a scientific revolution that reshapes teaching form and stimulates teaching vitality. AI permeates into the teaching field and teaching integration, goes deep into people's brain, mind and life growth, observes the occurrence of teaching and learning from a microscopic perspective, realizes precise teaching, empowers education, stimulates teachers to release energy, returns to people-oriented teaching, and realizes individualized education. The PME teaching platform based on AI in this paper can provide students with more flexible, convenient, diverse and efficient teaching forms, show realistic experimental processes and phenomena, and better meet the real-time and off-site teaching needs. Therefore, AI teaching is not only the development direction of teaching technology, but also the inevitable trend of teaching reform.

Funding

This article is not supported by any foundation.

Data Availability

Data sharing is not applicable to this article as no new data were created or analysed in this study.

Conflict of Interest

The author states that this article has no conflict of interest.

References

[1] Stechert C . Digital and distributed project management in mechanical engineering studies - a case study. Procedia CIRP, 2021, 100(1):500-505. https://doi.org/10.1016/j.procir.2021.05.110

[2] Oliveira J , Panontim L , Fonseca V H , et al. Project-Based Learning: a strategy for teaching integral differential calculus for engineering students in a school in Brazil. International Journal for Innovation Education and Research, 2021, 9(7):224-237. https://doi.org/10.31686/ijier.vol9.iss7.3244

[3] Netshimbupfe A F , Abdalla M , Erdem B D , et al. Solid Work simulation as a virtual laboratory concept for supporting student learning of mechanical engineering. New Trends and Issues Proceedings on Humanities and Social Sciences, 2020, 7(3):53-60. https://doi.org/10.18844/prosoc.v7i3.5233

[4] Schauer A M K , Fillingim K B , Pavleszek A , et al. Comparing the effect of virtual and in-person instruction on students' performance in a design for additive manufacturing learning activity. Research in Engineering Design, 2022, 33(4):385-394. https://doi.org/10.1007/s00163-022-00399-8

[5] Morozenko O P , Hrybanova N Y . Innovative approaches to improving the quality of teaching discipline "Computer methods of descriptive geometry and engineering graphics". System Technologies, 2019, 4(123):28-33.

https://doi.org/10.34185/1562-9945-4-123-2019-03

[6] Bhangale K B , Bhavsar S . Novel Teaching Methods For Data Structures & Algorithms. Compliance Engineering, 2020, 11(2):204-206.

[7] Matilda M , Allamneni S . Methods to foster oral proficiency in English in engineering students through innovative classroom teaching. International Journal of Psychosocial Rehabilitation, 2020, 24(6):4813-4823.

[8] Heer J . Agency plus automation: Designing AI into interactive systems. Proceedings of the National Academy of Sciences of the United States of America, 2019, 116(6):1844-1850.https://doi.org/10.1073/pnas.1807184115

[9] Glushaev A V , Zamarashkina V N , Malysheva T A , et al. Power, Metallurgical And Chemical Mechanical Engineering Cryogenic Instrument Refrigerating By Liquid Nitrogen In Underheated Conduction. Herald of Dagestan State Technical University Technical Sciences, 2019, 46(1):19-31.https://doi.org/10.21822/2073-6185-2019-46-1-19-31

[10] Karma I , Darma I K , Santiana I . Teaching strategies and technology integration in developing blended learning of applied mathematics subject. International Research Journal of Engineering IT & Scientific Research, 2019, 5(5):16-25.https://doi.org/10.21744/irjeis.v5n5.726

[11] Takayuki, SHIBATA. Application and Class Evaluations of Catchphrase-Based Learning Method in Specialized Subjects for Mechanical Engineers. Journal of the Japan Society for Precision Engineering, 2020, 86(3):233-238. https://doi.org/10.2493/jjspe.86.233

[12] Syed Z A , Trabookis Z , Bertrand J W , et al. Evaluation of Virtual Reality Based Learning Materials as a Supplement to the Undergraduate Mechanical Engineering Laboratory Experience. The international journal of engineering education, 2019, 35(3):842-852.

[13] Sugerman G P , Rausch M K . Teaching Material Testing and Characterization with an Open, Accessible, and Affordable Mechanical Test Device. Biomedical Engineering Education, 2022, 2(1):69-74. https://doi.org/10.1007/s43683-021-00056-x

[14] Bertoni A . Introducing value driven design in engineering education: teaching the use of value models in preliminary design. International Journal of Technology and Design Education, 2020, 30(3):531-552. https://doi.org/10.1007/s10798-019-09511-x

[15] Meseguer-Valdenebro J L , A Portolés, E Martínez-Conesa. Teaching Main Types Of Elastomers And Standardized Assays To Students In Engineering. Journal of Materials Education, 2020, 42(5-6):203-234.

[16] Linke M , Landenfeld K . Competence-based learning in engineering mechanics in an adaptive online learning environment. Teaching Mathematics and its Applications: An International Journal of the IMA, 2019, 38(3):146-153. https://doi.org/10.1093/teamat/hrz006

[17] Henry J , Hernalesteen A , Collard A S . Teaching AI to K-12 Through a Role-Playing Game Questioning the Intelligence Concept. KI - Künstliche Intelligenz, 2021, 35(2):171-179. https://doi.org/10.1007/s13218-021-00733-7

[18] Tilak G . AI: A Better And Innovative Technology For Enhancement And Sustainable Evolution In Education System. Information Systems Security, 2020, 11(1):552-560.

[19] Nimri R , Battelino T , Laffel L M , et al. Insulin dose optimization using an automated AI-based decision support system in youths with type 1 diabetes. Nature Medicine, 2020, 26(9):1380-1384. https://doi.org/10.1038/s41591-020-1045-7