Scholar Publishing Group
International Journal of Sports Technology
https://doi.org/10.38007/IJST.2022.030204
ISSN 2789-7141 Vol. 3, Issue 2: 39-55

Outdoor Full-color LED Display for Sports Games Based on Non-volatile Ferroelectric Read-write Memory Chip

Jiyin Li*

City University of Malaysia, Malaysia

**corresponding author*

Keywords: Non-volatile Ferroelectric Read-write Memory Chip, Sports Games, Outdoor LED, Full-color Display

Abstract: With the continuous update of industry technology, LED LCD displays are developing rapidly in the direction of high-brightness and full-color development. All-round color LED LCD displays are better and better showing their broad industry applications. The article is based on a non-volatile ferroelectric read-write memory chip designed for outdoor sports competitions full-color LED display. First, the detailed design introduces the actual design and application of the non-volatile power data management memory in the design of the power management data network management control software chip system and the principle of the control software, and analyzes in detail how to realize the specific design functions according to the specific design specifications of the software system. And then a new power management control system management software system that can scroll the full-color node LED horizontally on the display screen, adopts the power network management ARM Cortex-M3 core and uses the power supply microprocessor and network STM32 as the power supply The management control software system center, with the power network management FPGA as the central system, completes the high-speed horizontal scrolling of the entire scrolling display screen and the scrolling refresh of the display screen, and completes the system control software principle and design layout of the power management layer and the network PCB power supply Control and manage the software processing design of the layout, the hardware processing design of the circuit board and the software installation and debugging. The LED display screen can meet the functional requirements of outdoor sports games, and the display rate of the image of the LED full-color display screen has reached 91.82% on average, which has good stability.

1. Introduction

In the current society of sustained and rapid economic development, monolithic motor

technology runs through various high-tech innovative technology application fields. For example, in the field of computer technology, industrial machinery innovation technology, our home appliance manufacturing field, and so on. An endless stream of new technology products is constantly updated with the technological updates of this era. Its products have many advantages such as small size, low cost, and wide application area. Single-chip microcomputer technology is an integrated microcircuit control chip with a large application scale. It combines the input storage control circuit of the central processing unit, the input and output control circuit of the timer and so on. LED light-emitting display screens are widely used. The emission frequency and application range are becoming more and more extensive. Most of the traditional LED light-emitting display screens refer to a large-scale combination of numerous dot matrix emission forms with light-emitting photodiodes. Collectively, compared with the traditional LED light-emitting display screen, it also has many advantages such as high light-emitting brightness and large area. The rotary fluorescent lamp controlled by this single-chip technology is widely used in various entertainment places such as hotel KTV, bars, restaurants, hotels and so on. Moreover, in order to attract more attention of customers and enhance the core competitiveness of lighting enterprises in the entire lighting industry, this novel and creative design lamp can be used to replace the traditional ordinary lamps at the right time and place; At the same time, the application of modern military technology, such as air defense radar, reconnaissance, etc., is becoming more and more extensive.

At present, the number of LED unidirectional power supplies actually used in the new LED digital display is too much, and the two-way heat dissipation control circuit driven by the unidirectional power supply required for its use is also very large. Not only that, when the display is actually put into use due to the display temperature The heat dissipation is relatively high and the heat dissipation is very poor. Generally speaking, users may need to directly consider using another heat dissipation driving method to efficiently dissipate the heat dissipation components themselves. In this way, the power radiator may be greatly enlarged if it is just dissipated. The cost is not conducive to meeting the heat dissipation requirements of some market-oriented display applications. At the same time, the existing new models of LED color digital LCD screens are generally divided into two types of heat dissipation methods in terms of power supply radiator and power supply drive form selection. The use of composite plastic batteries or wired power supply drives power supply. The transmission power utilization efficiency is relatively low, and the service life is also Relatively short. Aiming at these main heat dissipation shortcomings of the current domestic new models of LED color digital liquid crystal displays, a design is designed for low heat dissipation costs, high brightness, long life, good performance of the heat sink and drive circuit, stable performance, and atypical performance. A novel two-way heat-dissipating rotating new type LED color digital liquid crystal display is relatively suitable for the digital display equipment industry to meet the market The rapid development of the application requirements of the digital display industry, as well as how to improve the sustainable service life of the digital display industry products and to improve the efficiency of data transmission power supply, etc., have far-reaching application significance.

Non-volatile security ferromagnetic mask copper magnetic conductive magnetization mask fast read and write memory chips due to the special work situation of the vehicle when the car is powered off, it not only has the unique advantage of losing important data at the same time during the storage phase of the file data Characteristics and is widely used. Yuan SH uses two chips X25045 and TMS320LF2407A with a new EEPROM fast reading and writing data memory so that it can give me a new connection on the hardware device interface to use it as a hardware interface for saving important process data in time. Integrated circuit, but the programming language is not

concise enough, and the operation efficiency is not high enough [1]. Jang J uses a time stamp. At the beginning of each time synchronization and deletion of a new page (one page at a time), a time stamp is written. The time stamp mainly includes the following information, Storage of the time before the start of a new page, it is convenient for real-time query and data storage of data recording, and easy to realize the simple and easy-to-understand algorithm of data access, but in this era, the storage speed has not kept up [2]. Philippe pointed out that when the location of an encrypted bus node is chaotic, the key method may think that there is a security risk for the attacker to perform the plaintext encryption operation of selecting multiple points at the same time, and the XOR plaintext encryption when the key method is in one While erasing multiple plaintext encryption operation attack data in the bus Flash at the same time, it will be found that it may directly lead to the leakage of the key security, but the research did not optimize the specific algorithm [3]. In order to overcome some of the technical limitations of this problem, Yan used non-volatile electronic memory of functional electronic materials to point out how many types of metal oxonate-based electronic memory have strong intelligent electronic data receiving and storage capabilities and can realize intelligent molecules. And the great potential of advanced data storage, but this research did not apply these materials [4]. Lau JH focuses on the indoor super-large special-shaped high-definition LED TV display management system, and takes the LED TV display management system optimization project design of the innovation center business lobby of the Anhui Radio and Television Bureau as the main case, and introduces the optimization of the project design plan and the content of the project implementation plan in detail. And case analysis, and the research has no actual innovation [5]. The large, medium and small screen TV LED digital display TV system designed by Jiang ZX, as long as it is supplemented by a simple peripheral control circuit design as needed, can effectively meet the large-screen TV LED display during the exhibition period, and enhance the universality of the large-screen LED display. The actual design and application results show that the system design is stable and reliable, and has strong economic and practicality, but the design greatly reduces the applicability of LED [6]. Pradan N uses the Chinese character shift scanning chip 74HC595 to construct the core drive control circuit, and outputs the core drive control signals through the row and column serial scanning method, uses the language FPGA to build a core drive control circuit, and uses the language Verilog HDL language to write the program to complete the Chinese character display The writing and reading of the screen and Chinese character coded data, according to the row and column serial scanning mode, respectively generate row and column positioning scanning drive signals and core control scanning signals, dynamically scan and drive a LED1 display screen at the same time, but this method is effective for LED The display technology is of little help [7].

This article is mainly based on the non-volatile ferroelectric read-write memory chip design of outdoor sports competition LED full-color display. It mainly uses two rows of photoelectric diode control chips with color ring light-emitting tubes that rotate vertically along the direction of each other as the entire full-color LED display. The color LCD display uses the dynamic visual persistence of the eye animation of the right eye of the protagonist in our picture, and combines the speed transmission control properties of the DC wireless radio frequency drive motor through the chip, and automatically controls the speed and acceleration of the electric motor of the entire full-color LCD display. Carry out real-time automatic control to stabilize the entire screen of the entire full-color LCD display.

2. Principle and Overview

2.1. Overview of the Structure of the Non-volatile Ferroelectric Read-write Memory Chip

The internal interface related signal information in the non-volatile disk storage system control software system module should include basic:

1) The internal interface related information of the one-time universal programmable interface memory (otp) provided by the internal third-party website of the non-volatile interface memory;

2) Mailbox interface information is used for the chip master microprocessor and chip (ap) corresponding power data manager to check the real-time reading of the power data of the internal otp of the chip;

Figure 1 shows the internal basic circuit structure of the basic control circuit system in the non-volatile data memory according to the relevant pin circuit information between each sub-module:

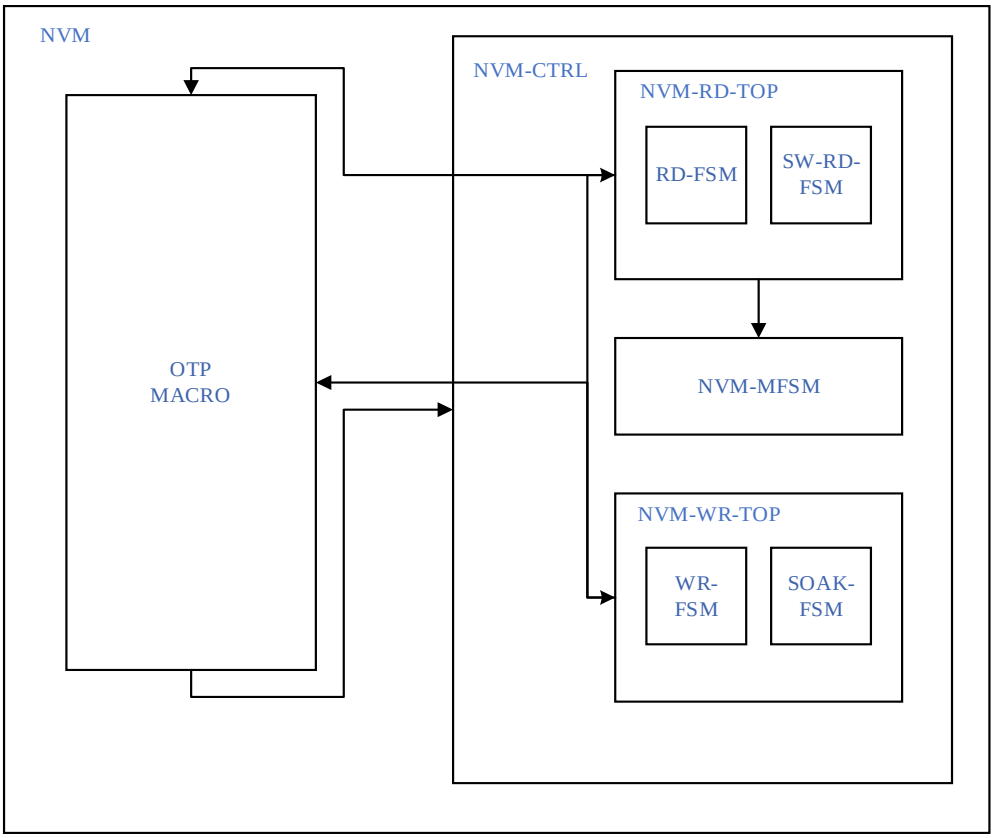

Figure 1. Non-volatile ferroelectric read-write memory chip control system structure

As can be seen from Figure 1, the non-volatile memory control system mainly contains three modules:

1. Main state machine control module;
2. Read the relevant control module of the data path;
3. Write to the relevant control module of the data path.
4. The status of the OTP writing process;
5. OTP reads the status of the process;

6. The state of the charge pump inside the OTP;
7. The status of various interrupts, such as interrupts caused by write errors.

The above information is the basic structure of the non-volatile data memory and the external sub-circuit module in the intelligent power quality management system chip and the basic information of the internal related hardware interface [8-9].

From the introduction in the previous section, it can be seen that the internal control function of the non-volatile device memory used in the design of the drive power quality management system chip can be basically divided into three functional modules: the main state machine data control function module, read data control function module and read and write data control function module [10-11]. According to different functional requirements, we can divide each module in detail, as shown in Table 1:

Table 1. Functional template division of non-volatile ferroelectric read-write memory chip

Processor	DRAM
Graphics	Near memory
Nuclear	NVRAM
Cache	BIOS NVRAM
Home agent	PM firmware

Among them: The main control function of the chip read state machine data control management module is to read the chip OTP or internal memory data or read instructions. The chip will not automatically rewrite during the reading process. Check the power data management module chip internal any register simply controls the read data [12-13].

2.2. Principle of LED Full-color Display

LED (light-emitting diode) backlight is the first application of light-emitting diodes. It is a new type of backlight solid-state crystal light-emitting display semiconductor device that converts internal light-emitting energy into light into other external light energy through backlight conversion [14-15]. Since the backlight display is a device that is first used to emit light and is also displayed, the LED display device backlight has high brightness, long life, low power consumption, rich colors, low power consumption, low operating voltage, and easy miniaturization after the first light. The backlight integrated circuit control board has many significant advantages such as compatibility and matching, and it is one of the first applications of light-emitting display devices in the backlight liquid crystal display system on the large-size computer screen [16-17]. For details, see Figure 2 for the integrated circuit design structure diagram of the infinite flow luminous display worker based on the backlight LED:

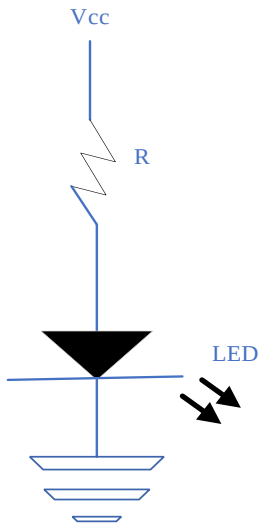

Figure 2. LED current limiting working circuit diagram

A core component of the LED is that it is a light-emitting chip composed of semiconductor chips such as P junction and P type and semiconductor chips such as N junction and N type. It is between P junction P type semiconductor and N junction N type semiconductor chip. There is also a small PN junction. In the working state of thermal equilibrium, the holes in the PN semiconducting junction area and the P area of the N junction have a lot of electrons in the P area with a high rate of electron migration, and the holes in the N area of the P junction have a lot of electrons in the P area with a relatively low rate of electron migration. Under normal conditions, due to the thickness limitation of the barrier layer in the N region of a PN semiconducting junction, electrons and holes in the P region cannot simultaneously undergo spontaneous luminescence recombination. For example, when electrons apply a forward injection voltage to the N region of a PN semiconducting junction, the excess electron energy is released in the form of light reflection, which may cause natural luminescence recombination. The wavelength and color of light are determined by various wavelength widths. The various wavelengths and colors of the light emitted by the LED chip are determined by the color of the luminescent material that can form a PN semiconducting junction. With different luminescent materials, the LED chip can emit from the ultraviolet at the same time. Various light rays of different angles and colors to infrared [18-19].

1) DC drive

This working method of DC light source voltage reverse driving is the simplest method of DC voltage driving. The cathode DC power supply of the entire various LED DC power cords is connected and then driven to a negative electrode of the DC power supply wire. The anode of the DC power cord is directly connected to the positive electrode of the limiting DC power supply wire after passing through the regulated DC power supply voltage driving resistance. By manually adjusting the driving current value of the DC power supply cathode Vcc or power supply R, it can be easily and directly adjusted [20-21]. The luminous intensity of various LEDs throughout. In the entire display screen of various LED light-emitting device products, it is not very suitable to directly use the DC light source voltage reverse driving method. In the entire display of various LED light-emitting device products, whenever the DC light source voltage reverses directly when driving this working mode, it is very inconvenient to directly adjust the luminosity and brightness of the entire LED device, as shown in Figure 3:

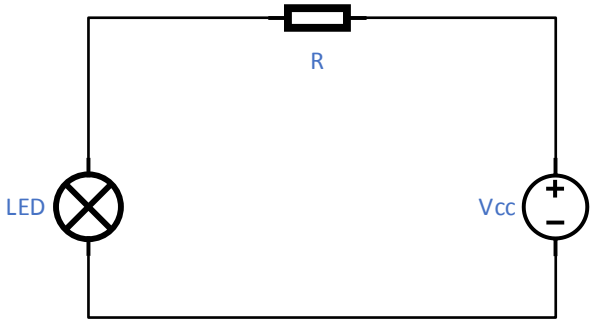

Figure 3. LED DC drive

2) Constant current drive

Using the basic principle of constant current low-pass drive can effectively overcome the serious impact of the dispersion of external devices [22-23]. Since the constant current output circuit of the new transistor has the characteristics of oriented constant current drive, it can be considered to use the new transistor constant current drive device LED. Figure 4 is a flow chart of the working principle of the device using a triode drive for constant current low-pass drive:

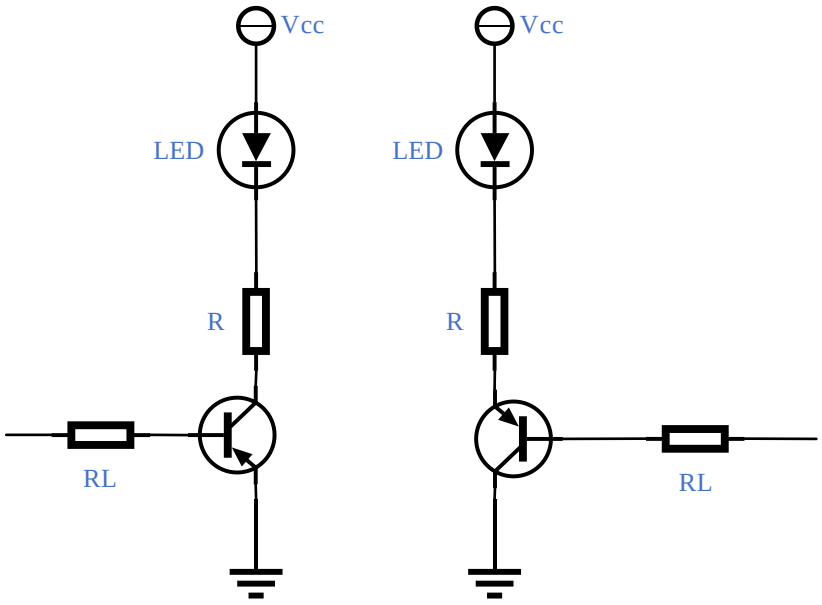

Figure 4. LED constant current drive

The LED forward current is:

$$I_f = \frac{Vcc - Ucc - Ut}{R_L} \tag{1}$$

Among them, Vcc is the power supply saturation voltage, Uce is the saturated active voltage drop in the triode transistor, Ut is the turn-on active voltage in the LED, and RL is the current limiting resistor. From equation (1), it can be seen that the positive dispersion of the rectifier parameters of the triode and the positive dispersion of the external rectifier resistance have a certain positive influence on the parameters of the forward short-circuit current. It is necessary to

accurately ensure the forward consistency of the short-circuit current. The current parameters of these circuit elements should have good current consistency [24-25].

3) Pulse drive

Taking advantage of the inertia of the typical visual persistence circuit of the human eye at this time, the three driving devices of the upward LED are used to respectively send repetitive signals and when they are energized, they will be energized together with the driving mode of power-off to make them light up. One power-off method is the power-off method of driving with a high-frequency frequency pulse drive signal. For power-off using high-frequency pulse drive signals to drive this power-off method, first of all, we must carefully and fully consider the occurrence rate and frequency of repetitive signals, and pass the simulation experiment of the operating characteristics of the visual persistence inert circuit of the human eye at this time. The result analysis shows that this recurrence frequency must not exceed 24hz at most, otherwise the human eye will not be able to directly feel the repetitive phenomenon of flashing flashes by feeling the recurring frequency at this time. In fact, it is often necessary to use higher response frequencies in applications, such as 50hz, 60hz, 7120hz, etc., and it should also fully consider the fixed upper limit of the response frequency in the device design. Since the frequency is greatly affected by the automatic response speed of the laser device, When the response frequency reaches a certain level, the device will not be able to be turned on and automatically turned off normally, resulting in not working properly. The second is the determination of the pulse current drive amplitude. Among them, as shown in the waveform diagram 4, the average pulse current and Ia are the instantaneous current and the frequency integral of i to the driving time, respectively [26]. For the light-emitting rectangular device and the waveform device, the following two expressions are beneficial:

$$I_a = (1/t)\int_0^T idt) \tag{2}$$

$$I_a = I_F(t_{on}/T) \tag{3}$$

The current in the PCB board needs to meet the following formula:

$$I_F = (T/t_{on})I_a = (T/t_{on})I_0 \tag{4}$$

That is, the amplitude of the pulse current is T/ton times of the DC drive current, which can make the pulse drive obtain the luminous intensity equivalent to the DC drive.

$$\Delta w_{ij}^{I}(k) = --\frac{\partial E(k)}{\partial w_{ij}^{I}} = e(k)\frac{\partial y_m}{\partial X_j}\frac{\partial X_j}{\partial w_{ij}^{I}} \tag{5}$$

$$e(k)\frac{\partial y_m}{\partial X_j}\frac{\partial X_j}{\partial w_{ij}^{I}} = e(k)w_j^{O}Q_j(k) \tag{6}$$

$$w_{ij}^{I}(k) = w_{ij}^{I}(k-1) + \mu\Delta w_{ij}^{I}(k) \tag{7}$$

The value range in the above formula is [0,1]; according to formula 5 and formula 6, the sum formula can be derived.

$$P_j(k) = \frac{\partial X_j}{\partial w_i^{D}} = f(S_j)X_j(k-1) \tag{8}$$

$$Q_{ij}(k) = \frac{\partial X_i}{\partial w_{ij}^{I}} = f(S_j)I_i(k) \tag{9}$$

Because the brightness of the LED is unstable, it will oscillate or converge in continuous

learning, and the blinking speed will also change accordingly. To avoid sending this phenomenon, a momentum factor α is added for correction. The value range of α is [0,1], The weighting algorithm is:

$$w_j^O(k) = w_j^O(k-1) + \mu\Delta w_j^O(k) + \alpha(w_j^O(k-1) - w_j^O(k-2)) \tag{10}$$

$$w_j^D(k) = w_j^D(k-1) + \mu\Delta w_j^D(k) + \alpha(w_j^D(k-1) - w_j^D(k-2)) \tag{11}$$

$$w_j^I(k) = w_j^I(k-1) + \mu\Delta w_j^I(k) + \alpha(w_j^I(k-1) - w_j^I(k-2)) \tag{12}$$

2.3. Hardware System Structure

1) LED display

The LED is mainly composed of diodes, which can easily form a display screen of any size. In the verification test of this system, a full-color 8×8 dot matrix module was used to design a 16×16 pixel dot matrix display unit, and 4 such dot matrix display units were used to form a 32×32 pixel LED display screen. It can display various information such as Chinese characters, images, animations, characters described in ASCII code, etc. by repeated cycles. The frequency of the cycle pulse signal is shown in Figure 6:

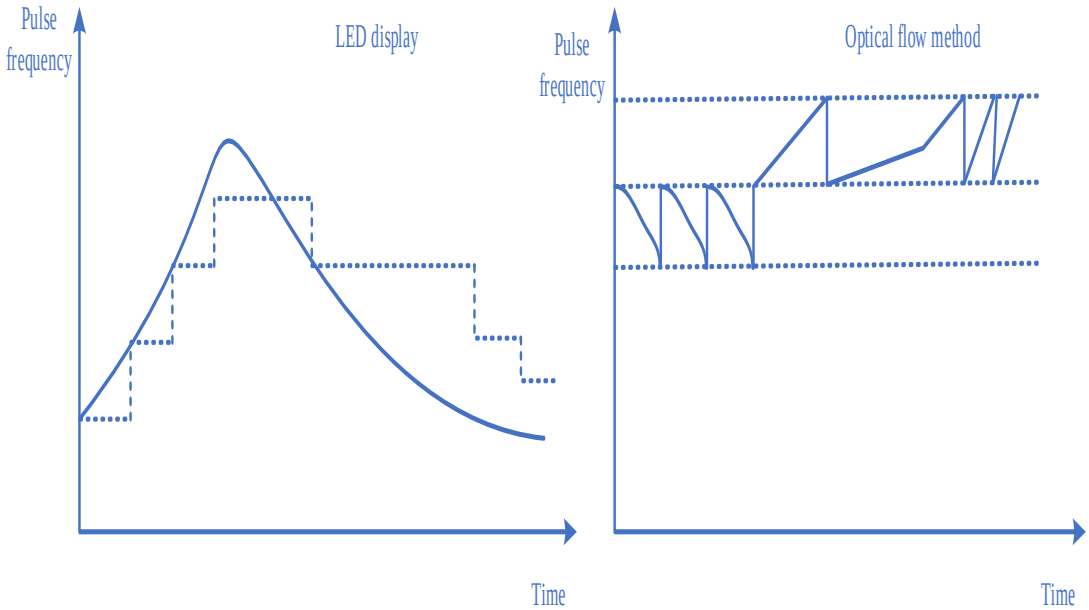

Figure 6. Pulse imaging frequency fluctuation graph

2) Display controller

The display controller is the core part of the entire LED display system, and it is also the focus of this article. The main functions of the display controller include: complete communication with the PC host computer, store display data, display data reconstruction, and generate LED display scanning control signals. In this design, a 32-bit RISC microprocessor and a piece of FPGA are used to form the display control system, and its overall structure is shown in Figure 7:

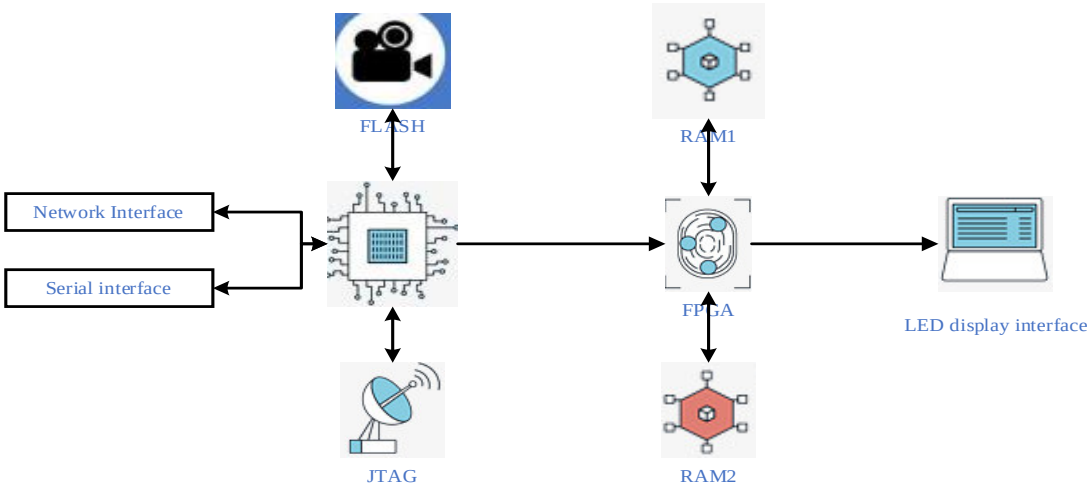

Figure 7. Block diagram of the control system

The system design uses the STM32 microprocessor module as the main controller chip of the system, and uses a FLASH motherboard as the storage module to store the display information. The display information will not be automatically lost after the power is off; the data is transmitted through Ethernet and wireless serial ports; by an FPGA The main board completes the high-speed data scanning of the LED liquid crystal display and then refreshes it, expands two pieces on an FPGA external board and uses the RAM main board as the buffer of the liquid crystal display to form a data read and write switching processing area, which uses table tennis logic. The data is read and written at high speed at the same time, which ensures that the read and write data can be transferred to the screen at high speed at the same time. Compared with other traditional LCD screens and microcontroller modules, this machine has a faster data processing speed in the system and supports the use of larger brightness to display information areas.

3) PC communication circuit

If the displayed information does not change for a long time in the system, it can be directly written into the external FLASH memory, and the data can be directly taken out from the FLASH memory for display. When the display information needs to be modified, the new display information is transmitted to the microprocessor through the PC communication circuit, and the original information in the FLASH is refreshed. The communication adopts two modes of serial interface and network transmission.

3. Outdoor Full-color LED Display Design for Sports Competitions

3.1. Design of LED Display Panel

The LED dot matrix display uses color light-emitting photodiodes as display pixels. It is composed of LED and LED two dot matrix display modules spliced with each other. The dot matrix display module is the display screen placed on the LED.

The basic display unit. Common LED dot matrix display module formats are 5×7, 7×9, 8×8, etc., of which the first two are mainly used to directly display various Western Pinyin characters, and the latter is commonly used to directly display various characters, kind of Chinese characters. Three 74HC245s are commonly used in industrial design, which can convert a total of 24 signals. The basic circuit is similar. The chip has a total of 20 pins. The pin functions are shown in Table 2:

Table 2. 74HC245 Pin Function

input signal		input Output	
OE	DIR	An	Bn
Low level	Low level	A=B	enter
Low level	High level	enter	B=A
High level	X	High resistance	High resistance

The LED display can be subdivided into monochrome (generally referred to as light pink or light green) according to the different primary colors in the color, two primary colors (red, green or blue double primary colors) two displays and all black color (red, green and blue three dual primary colors) three display screens. For a monochrome 8×8 dot matrix module, there is one LED at each pixel, and each module has 64 LEDs. Multiple. See (13) for visibility:

$$H_{max} = k \cdot d \tag{13}$$

According to the relevant national technical specifications, the dimensions of the gymnasium are as follows (14):

$$\mathrm{d} = \mathrm{H_{max}}/\mathrm{k} = 65/345 = 0.19\mathrm{m} \tag{14}$$

Because of the word height:

$$\mathrm{d} = 0.19\mathrm{m} \tag{15}$$

The total height of the combined word spacing is:

$$d_1 = 0.19 * 1.1 = 0.209m \tag{16}$$

$$h_1 = 0.209 * 12 = 2.51m \tag{17}$$

The aspect ratio of Chinese characters is set to 0.85, so the character width is:

$$k_1 = 0.19 * 0.85 = 0.1615m \tag{18}$$

$$d_2 = 0.1615 * 27 = 5.81m \tag{19}$$

According to the total number of words displayed, see formula (20):

$$\mathrm{S} = \mathrm{W} * \mathrm{H} = 5.81\mathrm{m} * 2.51\mathrm{m} = 14.59\mathrm{m}^2 \tag{20}$$

Direct processing uses 8×8 dot matrix unit module welding to form a larger screen. LED brand display welding will bring many new problems to the brand display design, production and welding installation process, such as the consistency of welding and assembly processes, The safety and reliability of welding, the flatness of the screen, etc., LED brand manufacturers generally combine several new dot matrix unit modules according to a certain welding method to form a new LED dot matrix unit board. In addition to the dot matrix unit module, there are many print machine sub-circuit boards and other electronic components. Electronic components generally need to be soldered on the front of the screen of a printing machine sub-circuit board. A dot matrix unit module needs to be inserted on the reverse side, and one at both ends needs to be reserved. The wire level distance and connection port of the input and output, the LED brand display is finally composed of many such dot matrix unit boards. Changing the number and arrangement of the LED unit boards can flexibly adjust the LEDs, the size of the display. This screen splicing method basically constitutes a larger screen splicing method, which not only facilitates the design and production of

large display screens, but also effectively simplifies the equipment installation and daily maintenance management of large display screens. It is simple and easy to replace directly with a new unit board.

3.2. The Driving Mode of the LED Display

The number of color light-emitting tube pin columns on the LED series dot matrix device display screen is very large. At the same time, in order to minimize the pins and also facilitate the completion of the internal packaging of the device, the LED series of traditional dot matrix display device driver modules are usually considered It directly uses a series of arrays of rows and columns, that is, each intersection of each small row and column is connected to each other and there is a new LED, so for this kind of LED series dot matrix device display drive Signal encoding drive generally does not think that it is necessary to directly use this new static digital signal to drive the scanning encoding method. It is usually considered to be a digital drive signal encoding method that requires a new dynamic digital signal to scan. Under the new dynamic digital drive signal scanning encoding mode, each row and column need to have a row or column and sequence driver. The same row of columns and rows of each row can share a column and row driver of the same or multiple columns, respectively. A digital logic circuit is input through the circuit, so that the same LED series dot matrix display device drive circuit modules in each row and column are connected to a main conductor bus in turn, so as to realize the display of Chinese characters or images on the LED display. Using scan drive mode can save a lot of drivers, and can simplify the design of the circuit.

The driving control circuit of a scan cycle with an 8×8 dot matrix scanning module is shown in the figure. The specific scan working process should be like this: the row and column scan cycle driving control circuit first gives the output row effective scan signal, from the first Line l1 starts a scan, and is given by the scan cycle drive control circuit in the first column to accurately determine whether the LED parameters of the corresponding two pixels on the next line of l1 are correct and should be lit normally; the next scan selection is the most common L2, l3, when the l8 scan cycle display is used up, the next scan cycle starts from 8 in the second next line, and the cycle is repeated. Due to the visual inertia of the human eye, when the scanning frequency is higher than a certain value, the human eye does not feel the lighting line by line, but sees the overall effect. According to Table 3, assign each light on and off. Break time:

Table 3. Distribution relationship between data bit lighting and off time

Data bit	Lighting time	Off time	Total time
D0	T/128	T-T/128	T
D1	T/64	T-T/64	T
D2	T/32	T-T/32	T
D3	T/16	T-T/16	T
D4	T/8	T-T/8	T
D5	T/4	T-T/4	T
D6	T/2	T-T/2	T
D7	T	0	T

3.3. Circuit Board Design

PCB (Printed Circuit Board, printed circuit board) design first considers the issue of the board layer, that is, the number of layers used. The use of multi-layer boards allows the system to have a relatively complete ground reference plane and power reference plane, so that better electromagnetic compatibility performance can be obtained, while there are more wiring areas and more wiring space, but multi-layer boards The cost is relatively high, which is not conducive to the market promotion of the design. Considering the cost issue, the controller PCB uses a double-layer board.

After a component system is imported into the PCB, we should carefully consider the overall layout of the system before the system wiring. Layout design is an important design link. The overall quality of the layout design result will directly affect the overall effect of the adjustment to the system wiring. Reasonable system layout design is the first step to ensure the success of PCB system design. In the system layout, according to the modular design method for the basic functions of the system, the system functions are divided into several functional modules, and the components are placed according to the distinction of the modules. For example, the power chip can be placed in one area, and the microprocessor, FLASH, etc. can be placed in another area. At the same time, it should also try to arrange the wiring position of each system function control unit in accordance with the parallel flow direction of the system signal. The PCB distribution board of the process control management system of the system design is shown in Figure 8. The signal is input from the serial port and the network port, through two microprocessors, FPGA, and finally output through the scan output port and other interfaces. The layout is that the signal is from the left. To the right, it is easier to realize two-way signal flow.

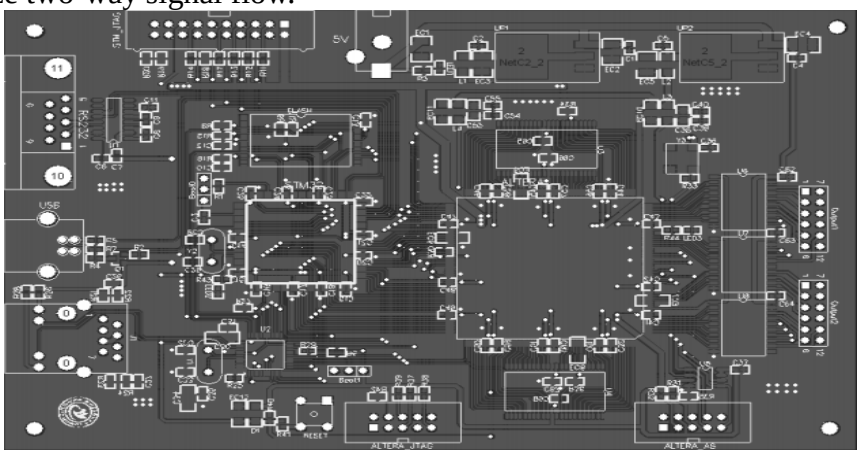

Figure 8. PCB layout of the control system

4. Debugging Results and Analysis

4.1. System Debugging

First of all, you need to check the LED to see if there are any dead pixels inside the display. Send data in the host computer software and send the full screen "0" to light up the entire LED display and display the colors of red, green, and blue respectively. If the LED does not light up at a certain point, it indicates that the LED has been damaged. Next is that it can automatically display specific simplified Chinese or English graphics to facilitate checking whether the driver or circuit software

on this display has any problems. If the red, green, and blue LEDs are lit at the same time, the display is White light, lighting items are shown in Table 4:

Table 4. Test table of lighting items

Project	Classification			Total	Accuracy
	1	2	3		
White light	50	5	2	58	82%
Red light	1	45	1	57	79%
Blue light	2	4	53	55	66%
Total				152	81%

The test design results show that the platform display software is working normally, indicating that the platform display software drive control circuit carefully designed by the monitoring system is correct and can display the platform subsystem diagram and realize the real-time reception and transmission of video data from the automatic monitoring platform subsystem Analyze, according to the automatic control system commands issued by the signal parser, obtain the system template and monitoring data of sports competitions and basketball games that the system needs to display in real time and display performance-related information in real time, determine which person's template display style the template is, and complete the template The data is correctly matched with the display style of the monitoring interface, and it is displayed on the large screen of the stadium according to the competition requirements and the display attributes of the display. The debugging LED response fluctuation data is shown in Figure 9:

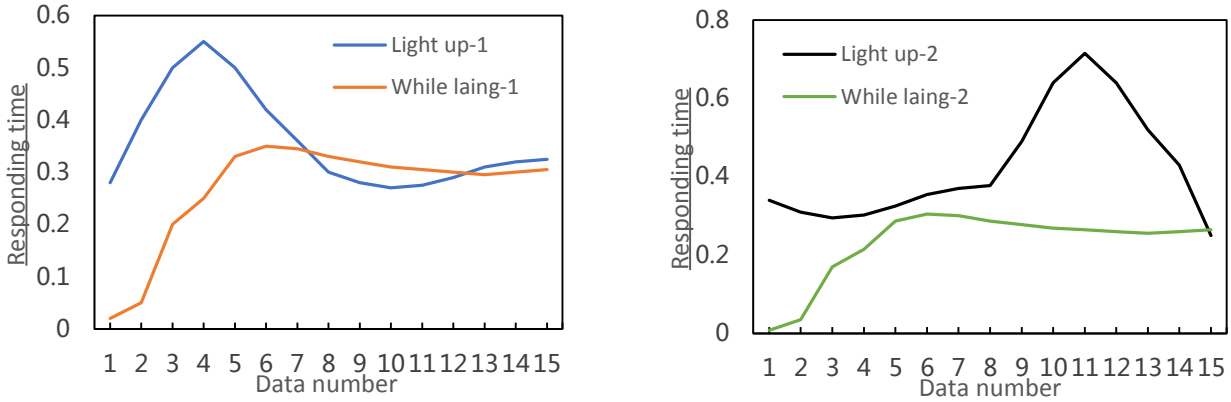

Figure 9. LED indicator response speed

According to the fluctuating reality of these response times, it may appear that the display text is unstable on the basis of no problem with the hardware.

Solution: Modify the loop function and delay function in the program, so that the rotating LED display time is enhanced, and the characters displayed by the LED need to reach the level that the human eye can clearly distinguish. Constantly adjust the display parameters, delay parameters and cycle times in the code. This is because the program design is flawed, which is slightly inconsistent with the actual situation, and the program time for displaying characters is relatively short, which cannot reach the time for human eyes to distinguish.

4.2. Overall Analysis

The method of taking the text modulus is to divide the strokes of the text into several parts longitudinally. Each vertical bar is equivalent to a stroke, and each vertical bar is equivalent to a row of rotating LED lights. In each vertical bar, where there are strokes, the LED is on; where there are no strokes, the LED is off. The influence of the rotation characteristics of the work on the displayed text should be taken into consideration when taking the text modulus. When the circuit board rotates, the innermost lamp has a short stroke while walking through the same angle, while the outermost lamp has a longer stroke. The strokes of these lights are actually the strokes designed to be displayed. After many text display tests, the success rate of each text display is shown in Figure 10:

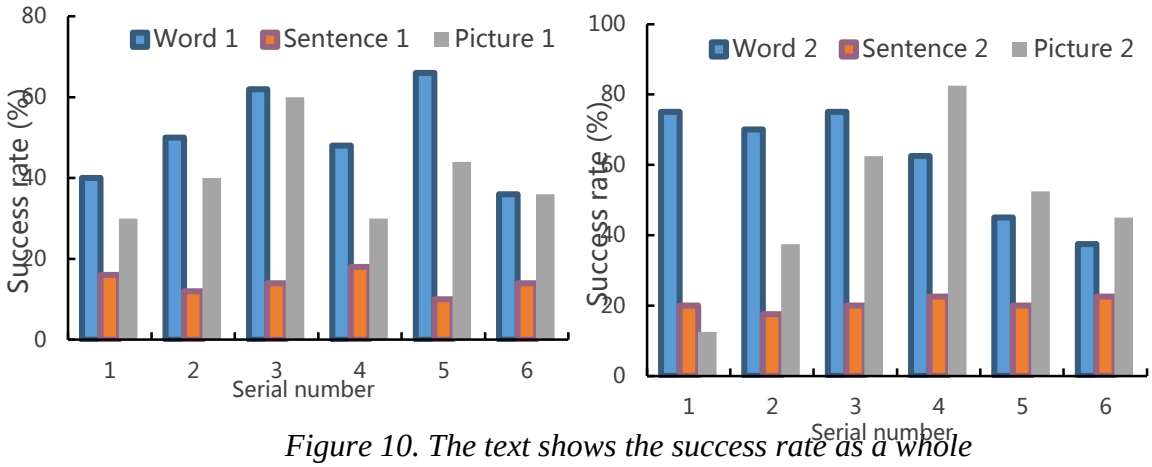

Figure 10. The text shows the success rate as a whole

Next, test and debug the system to ensure that the system can work normally and stably in the indoor and outdoor environment; accurately weld the hardware, and how to solve the problems encountered during the debugging of the hardware and software. All have been explained one by one. This design realizes the outdoor LED full-color display design for sports competitions with non-volatile ferroelectric read-write memory chips. The final product display is relatively stable without flickering, and achieves the expected effect. Each time the LED lights up, the success rate is over 91.82%.

5. Conclusion

This paper is based on the design of a non-volatile steel model capacitive read-write memory chip for the football sports game outdoor indoor LED digital full-color upper display system design. The basic functionality and usability of the module use UVM design verification system methodology to build a design verification system environment, and sort out the design verification system requirements. This paper uses the STM32 microprocessor module as the system control processing center system to design a new type of outdoor LED full-color display as the control center system, and uses FPGA to complete the refresh of the high-speed upper display of the outdoor full-color LED display. The system is in the laboratory has verified that the true color display of the color image on the LED screen is realized, the display image is clear, the display is smooth and flicker-free, the system is stable, and the function of asynchronous display on the LED display can be reliably realized, and the event information can be successfully completed. The entire process of display meets the needs of the competition, and the system is easy to operate and

stable, ensuring the real-time and accuracy of the game information display. Due to the relationship between software technology and environmental factors for a period of time and the limited level of its own software technology, the technical level of the system itself needs to be further improved and developed, but it can achieve a perfect organic combination of software operating system speed and application system software programming operation capabilities. This can further greatly reduce the cost of software system development and improve the reliability of the system during normal operation.

Funding

This article is not supported by any foundation.

Data Availability

Data sharing is not applicable to this article as no new data were created or analysed in this study.

Conflict of Interest

The author states that this article has no conflict of interest.

References

[1] Yuan S H , Yan S S , Yao Y S , et al. Process Integration and Interconnection Design of Passive-Matrix LED Micro-Displays With 256 Pixel-Per-Inch Resolution. IEEE Journal of the Electron Devices Society, 2020, PP(99):1-1.

[2] Jang J , Jeong H , Hu G , et al. Kerker-Conditioned Dynamic Cryptographic Nanoprints. Advanced Optical Materials, 2019, 7(4):1801070.1-1801070.8. https://doi.org/10.1002/adom.201801070

[3]Philippe, Gentet, Jinbeom, et al. Fantatrope, a moving hologram display: design and implementation.. Optics express, 2019, 27(8):11571-11584. https://doi.org/10.1364/OE.27.011571

[4] Yan, Hongying, Zhao, et al. The application of plant dyeing technology in the full dress design. China Textile, 2018(12):58-60.

[5] Lau J H , Ko C T , Lin C , et al. Fan-Out Panel-Level Packaging of Mini-LED RGB Display. IEEE Transactions on Components, Packaging, and Manufacturing Technology, 2021, PP(99):1-1.

[6] Jiang Z X , Park K H , Hwang S M . Design of a Width Slim Linear Vibration Motor Used for Automotive LCD Display Panel. IEEE Transactions on Magnetics, 2021, PP(99):1-1. https://doi.org/10.1109/TMAG.2021.3079416

[7] Pradan N , Dahiwadikar A , Patankar A , et al. IoT Based Led Scrolling Display. International Journal of Scientific Research & Management Studies, 2020, 4(1):1-5.

[8] Slobodyan E , Nathan J B . Build a Self-Correcting LED Clock. Circuit cellar, 2019(343):6-12.

[9]F Ghasemi, Hormozi-Nezhad M R , Mahmoudi M . A new strategy to design colorful ratiometric probes and its application to fluorescent detection of Hg(Ⅱ). Sensors and Actuators, 2018, B259(APR.):894-899. https://doi.org/10.1016/j.snb.2017.12.141

[10] Eo S W , Lee J G , Kim M S , et al. ASIC Design for Real-time One-shot Correction of Optical Aberrations and Perspective Distortion in Microdisplay Systems. IEEE Access, 2018, PP(99):1-1.

[11] Shih Y H , Chang J Y , Kuo Y K , et al. Design of GaN-Based Multicolor Tunnel-Junction Light-Emitting Diodes. IEEE Transactions on Electron Devices, 2017, PP(99):1-7. https://doi.org/10.1109/TED.2017.2773660

[12] Bae H W , Jang Y , An M , et al. Thermal Transfer Pixel Patterning by Using an Infrared Lamp Source for Organic LED Display. Journal of Sensor Science and Technology, 2020, 29(1):27-32. https://doi.org/10.5369/JSST.2019.29.1.27

[13] Chung K C , Lee J J , Huang J R , et al. A Dynamic Compensated and 95% High Efficiency Supply Buffer in RGB Virtual Pixel MicroLED Display for Reducing Ghosting by 73% and Achieving 4 Times Screen Resolution. IEEE Transactions on Power Electronics, 2020, PP(99):1-1.

[14] Yan Z W , Yan Q , Dian-Lun L I , et al. Research Progress of High Integration Density μLED Display Technology. Chinese Journal of Luminescence, 2020, 41(10):1309-1317. https://doi.org/10.37188/CJL.20200191

[15] Mao X , Zheng X , Wang R , et al. Variation of LED Display Color Affected by Chromaticity and Luminance of LED Display Primary Colors. Mathematical Problems in Engineering, 2020, 2020(20):1-14. https://doi.org/10.1155/2020/1612931

[16] Seong J , Jang J , Lee J , et al. CMOS Backplane Pixel Circuit With Leakage and Voltage Drop Compensation for an Micro-LED Display Achieving 5000 PPI or Higher. IEEE Access, 2020, PP(99):1-1.

[17] Yan C , Liang G , Liu G , et al. Eliminating the Residual Ultraviolet Excitation Light and Increasing Quantum Dot Emission Intensity in LED Display Devices. IEEE Transactions on Electron Devices, 2021, PP(99):1-8.

[18] Chen C J , Chen H C , Liao J H , et al. Fabrication and Characterization of Active–Matrix 960×540 Blue GaN-Based Micro-LED Display. IEEE Journal of Quantum Electronics, 2019, PP(99):1-1.

[19] Ejzak G A , Dickason J , Marks J A , et al. 512 $\times$ 512, 100 Hz Mid-Wave Infrared LED Microdisplay System. Journal of Display Technology, 2016, 12(10):1139-1144.

[20] Ejzak G , Dickason J , Marks J , et al. 512x512, 100Hz Mid-wave Infrared LED Microdisplay System. Journal of Display Technology, 2016, 12(10):1-1. https://doi.org/10.1109/JDT.2016.2590563

[21] J Liu. Application and Development of LED Display in Sports Field. Light and Engineering, 2018, 26(3):44-50. https://doi.org/10.33383/2018-131

[22] Kanniga E , Mohamedmalik S , Abiramisri G , et al. SSS led display using raspberripi. International Journal of Pure and Applied Mathematics, 2018, 119(12):5141-5149.

[23] Yi X , Zhou M . Detection and analysis of led display system in large stadiums. Light and Engineering, 2018, 26(3):51-57. https://doi.org/10.33383/2018-132

[24] Mike, O'Keeffe. Four-digit, seven-segment LED display - Part 4. Everyday practical electronics, 2018, 47(3):48-50.

[25] Hao Y , Deng Z . Partial Correction Fast Algorithm for Full Color LED Display Screen. Bandaoti Guangdian/Semiconductor Optoelectronics, 2017, 38(2):264-267.

[26] Zeng X Y , Zhou X T , Guo T L , et al. Crosstalk reduction in large-scale autostereoscopic 3D-LED display based on black-stripe occupation ratio. Optics Communications, 2017, 389(Complete):159-164. https://doi.org/10.1016/j.optcom.2016.12.042