Scholar Publishing Group
Kinetic Mechanical Engineering
https://doi.org/10.38007/KME.2022.030101
ISSN 2790-2676 Vol. 3, Issue 1: 1-8

Heat Transfer Coefficient of Impeller Rim of High-power Steam Turbine Based on Deep Neural Network

Vermeulen Sofie

Department of Electromechanical Engineering, Faculty of Engineering, Vrije Universiteit Brussel, Pleinlaan 2, 1050 Brussels, Belgium

Keywords: Deep Neural Network, High-Power Steam Turbine, Heat Transfer Coefficient, Power Mechanical Engineering

Abstract: Cogeneration and waste heat recovery and utilization are important means to improve energy utilization, which opens up a broad application prospect for steam turbines. Digital electro-hydraulic control system is responsible for the speed and load control of the unit, and its control performance directly affects the safety and economy of the unit. The purpose of this paper is to study the heat transfer coefficient of high-power steam turbine impeller rim with deep neural network. In this paper, the surface emission coefficient of high-power turbine rotor blades is measured by power method. Then, the scraping characteristics of the rotor blade and ceramic coating of the high-power turbine box were experimentally studied, focusing on the effects of different scraping depth, scraping rate and disc linear speed on the scraping temperature and scraping force. According to the influence of process and nonlinearity on system stability, a neural network PID controller is designed to replace the traditional PID controller, to reduce the influence of nonlinearity on the control system, and to realize the adaptive adjustment of controller parameters. In this paper, three algorithms are selected to calculate the heat transfer coefficient of turbine wheel rim under different working conditions. The influence of grid number on the average tip temperature of steam turbine is studied and analyzed. The experiment shows that the average blade tip temperature of the impeller tends to be stable after the grid number is more than 4.47 million.

1. Introduction

With the continuous development of industrial control system, the control system of steam turbine heating unit is constantly updated, especially for large and medium-sized enterprises with high-power steam turbines. Aiming at the steam turbine control system in China, the research focuses on high-power reheat turbine units, including 600KW, 1000KW and ultra-supercritical units, etc., while the research on steam turbines suitable for small and medium-sized enterprises is very

Copyright: © 2022 by the authors. This is an Open Access article distributed under the Creative Commons Attribution License (CC BY 4.0), which permits unrestricted use, distribution, and reproduction in any medium, provided the original work is properly cited (https://creativecommons.org/licenses/by/4.0/).

little, and small and medium-sized enterprises are an important part of diversified enterprises in China. Therefore, the research on the control system of small and medium-sized steam turbines is based on The control system of small steam turbine in China is relatively simple, and hydraulic mechanical regulating system is mostly used, so digital electro-hydraulic control system is seldom used in small steam turbine. With the continuous progress of measurement and control technology, the accuracy of electronic components is also constantly improving, and at the same time, more and more alloy materials with excellent performance are used in the important components of the unit, which makes the design of steam turbine develop towards high automation, AG steam parameters and high speed. This puts forward the need to improve the control system of small and medium-sized steam turbines according to their characteristics, and realizes the function of DEH through DCS, thus realizing the integration of DEH and DCS [1-2].

In the research of heat transfer coefficient of high-power steam turbine impeller rim with deep neural network, many scholars have studied it and achieved good results. For example, Wang J used artificial neural network to establish a nonlinear model of unit load and main steam pressure characteristics, which can better fit the complex relationship between load and valve opening [3]. Wang combines neural network with traditional PID. The results show that the controller can still ensure good stability and robustness when the model parameters fluctuate and the thermoelectric is strongly coupled. The problem of thermoelectric coupling can also be decoupled by "fixing electricity by heat" [4].

In this paper, the structure and working principle of DEH control system of single extraction steam turbine are analyzed, two different operating conditions are studied, and the control difficulties existing in the operation process are found out: the electro-hydraulic servo system has strong nonlinearity under the conditions of empty load and pure condensation; There is a strong coupling between thermoelectric loads in the system under the condition of steam extraction. Then, the dynamic mathematical model of DEH control system is analyzed and deduced by the method of mechanism modeling, which lays the foundation for the final design of steam turbine control system, introduces the traditional PID control algorithm, describes the typical nonlinear links in the system, and builds a PID control simulation model with nonlinear links in Matlab to simulate and analyze the influence of nonlinearity on the system performance. Aiming at the problems existing in the PID controller adjustment process, a neural network PID controller is designed to weaken the influence of nonlinearity on the system performance, and it is compared with PID controller to realize the function of parameter adaptive adjustment. The simulation analysis of load disturbance and parameter fluctuation under empty load and pure condensation conditions is carried out, and the control effects of neural network PID controller and traditional controller are compared. In addition, according to the multi-input and multi-output characteristics of the system, the gain matrix is obtained, and then the correlation degree of the system is analyzed. According to the established dynamic mathematical model, the coupling degree between thermoelectric loads is analyzed. A simple feedforward compensation decoupling link is introduced, which works together with neural network PID to realize the decoupling of thermoelectric loads. The control scheme of the control system under heating and steam extraction conditions is put forward, and some changes of thermoelectric loads and parameter fluctuations are simulated and analyzed.

2. Study on Heat Transfer Coefficient of High-Power Steam Turbine Impeller Rim with Deep Neural Network.

2.1. Neural Network PID Controller Design

At present, the research status is mainly based on fuzzy control and neural network control, all of which are aimed at solving the nonlinearity, uncertainty and strong coupling of the control system.

In the DEH system of steam turbine, the traditional PID control algorithm obtains a set of parameters that are applicable at this moment through a lot of trial and error, and will not change again, so the optimal control scheme cannot be guaranteed. During the actual operation of the steam turbine, once the working condition changes, a large number of tests need to be carried out again. The process is too complicated, and fuzzy control relies too much on fuzzy rules. Similarly, when the working condition changes or the field environment changes, the control performance is difficult to guarantee [5-6]. Neural network has strong reasoning and self-learning ability. Combining this advantage of neural network with traditional PID controller, the function of neural network PID controller is added to DEH control system through software programming. When faced with complex and changeable field environment, the controller parameters can be adjusted adaptively to realize intelligent control.

The neural network has the self-learning ability, the ability to adjust the connection between internal nodes, and the ability of fast adjustment and nonlinear mapping, so it is often combined with PID control. As shown in Figure 1, the PID control structure diagram of BP neural network is shown [7-8].

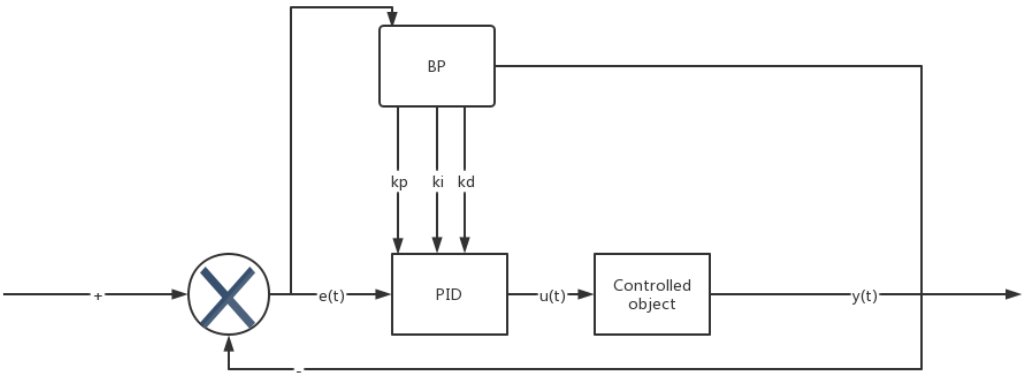

Figure 1. BP neural network PID control structure diagram

From the neural network algorithm, it can be seen that the neural network PID control algorithm includes two aspects: relying on the forward propagation of signals, sequentially passing through all transfer functions to complete the input-output process; At the same time, the output to the input also carries out the weight calculation and adjustment process between neural networks.

There are three neurons in the input layer, and the number of defined data k=1,2,3...m, then the output of the neural network input layer is [9-10]:

$$net_i(k) = x_i(k), i = 1,2,3 \tag{1}$$

There are h nodes in the hidden layer, and the input and output of the hidden layer are:

$$net_h(k) = \sum_{i=1}^{3} w_{h,i} net_i(k)$$
$$O_h(k) = f[net_h(k)](h = 1,2,3) \tag{2}$$

2.2. Brief Description of Decoupling Scheme

With the gradual improvement of control system accuracy requirements, a series of decoupling schemes have emerged, among which the diagonal matrix decoupling method is relatively mature.

However, strict diagonalization is not easy or even impossible, which may lead to the increase of system state quantity and spatial dimension, and it is mainly used in mechanical hydraulic or full hydraulic regulating systems [11-12]. Proportional decoupling method realizes static decoupling of extraction steam turbine with the idea of flow distribution, and uses proportional coefficient for feedforward pre-regulation. In the actual process, in order to realize dynamic decoupling and slow down the change speed of dynamic process, it is necessary to introduce inertia compensation link to make "high pressure cylinder flow circulation" and "low pressure cylinder flow circulation" simultaneously, which is troublesome [13-14]. The essence of feed-forward solution is to treat the coupling term as interference. In multivariable systems, feed-forward is used to realize self-correction, to decouple the controlled object online, to compensate the coupling and to complete the optimal self-tuning of the controller parameters. It is the unification of adaptive adjustment and decoupling, which is also the basis of intelligent decoupling, and can well meet the requirements of time-varying systems [15-16].

3. Research and Design Experiment of Heat Transfer Coefficient of High-Power Steam Turbine Impeller Rim with Deep Neural Network.

3.1. Numerical Simulation

In this paper, the cascade with long blades in the last stage of steam turbine is studied. Because the working medium in the last stage of steam turbine is in a wet steam state, and there are complex transonic flows in the cascade, the flow field structure is complex, so it is necessary to select an appropriate model to study it to obtain more accurate results.

At present, the basic flow of simulation calculation is to establish a geometric model and generate a computational grid in the pre-processing module, set the boundary conditions by using a solver, select an appropriate discretization method and turbulence model according to the actual situation, and finally analyze the obtained results in the post-processing module. In this paper, the numerical simulation of the last stage cascade will also follow this flow [17-18].

3.2. Experimental Design

In this paper, the calculation algorithm of heat transfer coefficient of high-power steam turbine impeller rim based on deep neural network is studied. Firstly, two traditional heat transfer coefficient algorithms are compared with the algorithm in this paper, and the calculation is carried out for gas turbines under different working conditions. Secondly, the influence of different grid numbers on the average tip temperature of steam turbine is analyzed.

4. Experimental Analysis of Heat Transfer Coefficient of High-Power Steam Turbine Impeller Rim with Deep Neural Network.

4.1 Heat Transfer Coefficient

In this paper, three different algorithms are selected to calculate the heat transfer coefficient of the impeller rim of several groups of different large steam turbines. Calculate the large steam turbines under different working conditions, and the calculated data are shown in Table 1.

It can be seen from Figure 2 that the difference of heat transfer coefficients calculated by the three algorithms is very large. The main defect of the second algorithm is that it doesn't consider some related convection exchange, so the calculated heat transfer coefficient is too small, which is quite different from the actual value. The algorithm 1 gives the calculation of heat transfer

coefficient for some fixed large steam turbines. Because of its poor versatility, it is impossible to calculate the heat transfer coefficient of other models. In contrast, the algorithm in this paper is universal, and it can calculate the heat transfer coefficient of impeller rim of different types of steam turbines.

Table 1. Calculation results of heat transfer coefficient

	Regulating stage 100%	Regulating stage 50%	Medium pressure first stage100%	Medium pressure first stage50%	Middle pressure last stage100%	Middle pressure last stage50%
Algorithm 1	349	349	116	116	116	116
Algorithm 2	3.34	3.24	3.46	3.46	3.38	3.39
Algorithm in this paper	1063	1023	2391	2065	2232	178

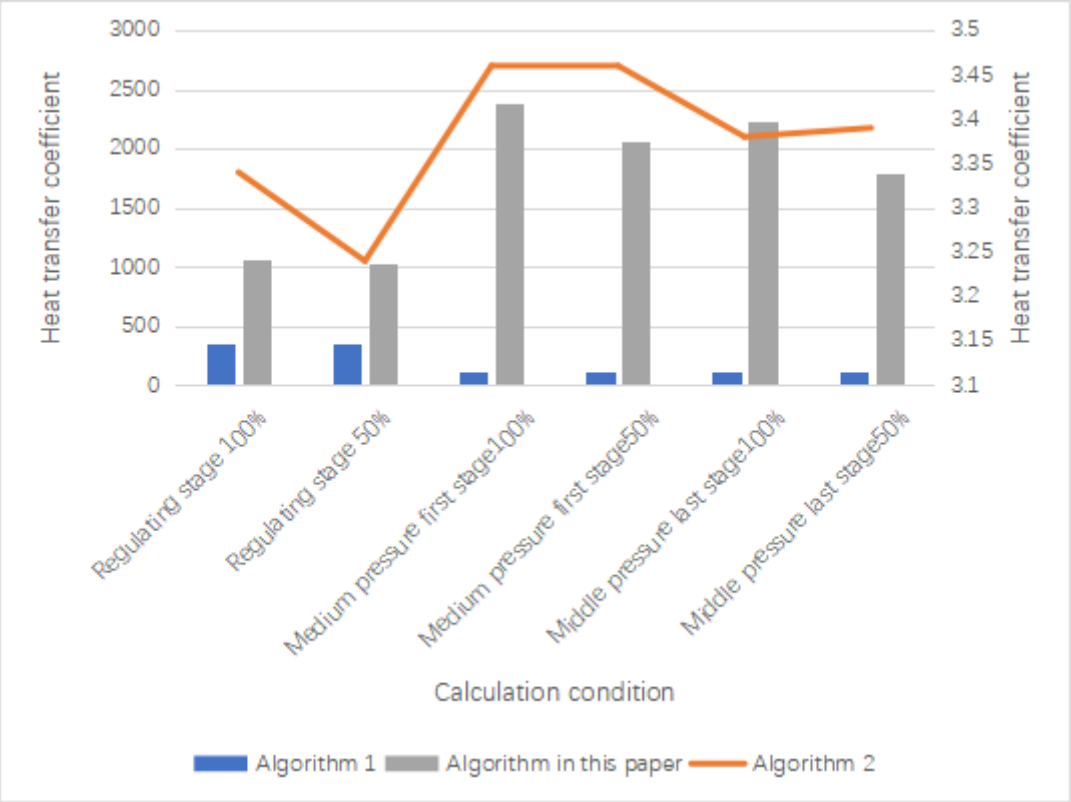

Figure 2. Heat transfer coefficient calculated by three algorithms

4.2. Number of Grids

The density of grids in the model will affect the accuracy of numerical calculation results. Too many grids will slow down the calculation speed, resulting in the underutilization of calculation resources, while too few grids will reduce the calculation accuracy. Therefore, this paper makes an experiment of grid independence on the selection of grid numbers. The same model is divided into

different grids, and the grid independence experiment is carried out with the average temperature of the tip of the model as a reference. The experimental data are shown in Table 2.

Table 2. Effect of grid number on blade tip average temperature

	134	227	336	447	580	668
Test1	1176	1190	1192	1200	1200	1200
Test2	2213	2243	2261	2300	2300	2300

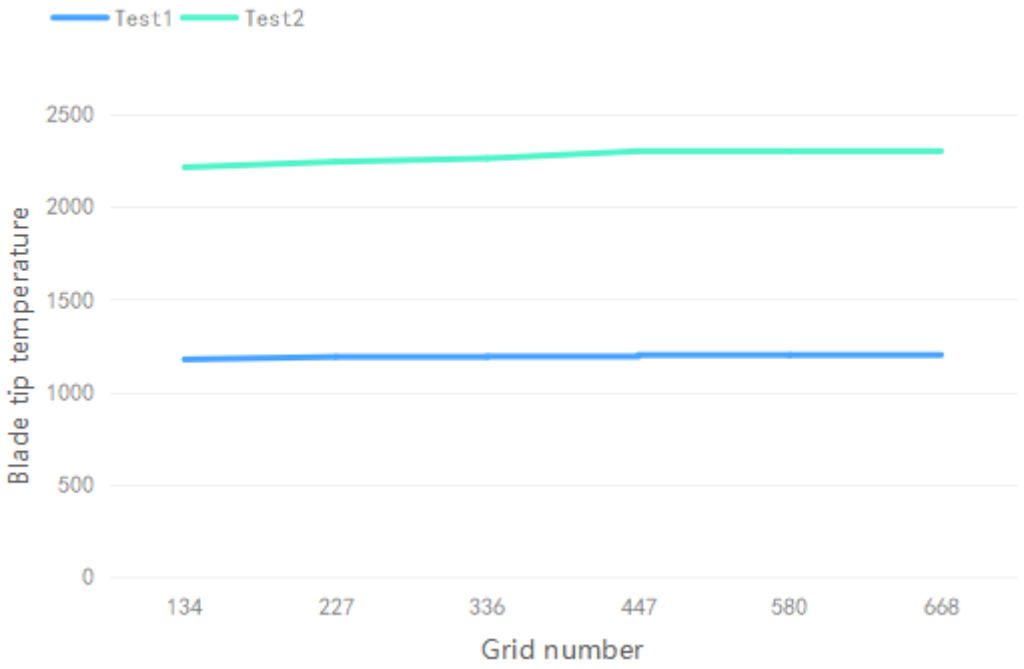

Figure 3. Variation of average tip temperature with the number of grids at the end of two groups of experiments

It can be clearly seen from Figure 3 that the average tip temperature of two groups of steam turbines with different power tends to be stable after the grid number is more than 4.47 million. It can be considered that the number of grids has little influence on the accuracy of calculation at this time. Therefore, through grid experiments, the number of grids finally selected in this paper is about 4.47 million.

5. Conclusion

This paper comprehensively introduces the structure and working principle of DEH system of single extraction steam turbine, and deeply analyzes the control difficulties existing in the unit under the conditions of empty load, pure condensation and extraction heating. It is concluded that the slide valve and torque motor in the electro-hydraulic servo system have dead zone and amplitude limiting nonlinearity during the operation of the unit. There is a serious coupling relationship between electric load and thermal load under the condition of steam extraction and heating. Then, the mathematical models of steam volume, extraction volume and rotor are deduced by mechanism modeling method. Under the conditions of empty load and pure condensation, a series of simulations are carried out to verify that the designed neural network PID controller is better than PID controller. In addition, when the system is put into steam extraction operation, due to the strong coupling between thermal load and electrical load, the coupling degree of thermoelectric load is analyzed firstly, and the existing decoupling algorithms are comprehensively analyzed, and a feedforward compensation decoupling scheme is proposed. Combining with the newly designed neural network PID controller, a decoupling control system is built, and different situations are simulated and analyzed. There are many operating conditions of turbine electro-hydraulic servo system, which can adapt to different situations. The empty load, pure condensation and extraction conditions designed in this paper are only two conditions of single machine operation. With the development of enterprises, the grid-connected mode will be gradually adopted. There are other working conditions in this mode, which have not been studied in this paper. Meanwhile, the situation of factory section is complex and changeable, which are all important factors that need attention.

Funding

This article is not supported by any foundation.

Data Availability

Data sharing is not applicable to this article as no new data were created or analysed in this study.

Conflict of Interest

The author states that this article has no conflict of interest.

References

[1] Zhang H , Qin S , Meng L . Research on deep drawing with multi-ring blank holder technique. The International Journal of Advanced Manufacturing Technology, 2022, 122(9-10):4115-4126. https://doi.org/10.1007/s00170-022-10142-1

[2] Lee J R H , Pavlova M , Famouri M , et al. Cancer-Net SCa: tailored deep neural network designs for detection of skin cancer from dermoscopy images. BMC Medical Imaging, 2022, 22(1):1-12. https://doi.org/10.1186/s12880-022-00871-w

[3] Wang J , Mo Y , Hong Y , et al. Simulation and experimental research on the influence of lubrication on the comprehensive friction of TGDI engine. Industrial Lubrication and Tribology, 2022, 74(6):663-673. https://doi.org/10.1108/ILT-12-2021-0472

[4] Wang S , Zhou J , Shao C , et al. Study on the prediction method and the flow characteristics of

gas-liquid two-phase flow patterns in the suction chamber. International Journal of Numerical Methods for Heat & Fluid Flow, 2022, 32(8):2700-2718. https://doi.org/10.1108/HFF-08-2021-0588

[5] Debicki D , Gofton T , Laforge G , et al. Ethics of non-therapeutic research on imminently dying patients in the intensive care unit. Journal of Medical Ethics, 2022, 187(N11):1212-8.

[6] Xiaofei Y . Research on the action mechanism of circular economy development and green finance based on entropy method and big data. Journal of Enterprise Information Management, 2022, 35(4/5):988-1010. https://doi.org/10.1108/JEIM-01-2021-0024

[7] Cerqueira S , Arsenio E , Henriques R . Inference of dynamic origin–destination matrices with trip and transfer status from individual smart card data. European Transport Research Review, 2022, 14(1):1-18. https://doi.org/10.1186/s12544-022-00562-1

[8] Al-Abrrow H , Halbusi H A , Chew X Y , et al. Uncovering the antecedents of trust in social commerce: an application of the non-linear artificial neural network approach. Competitiveness Review: An International Business Journal, 2022, 32(3):492-523. https://doi.org/10.1108/CR-04-2021-0051

[9] Pratono A H . The strategic innovation under information technological turbulence: the role of organisational resilience in competitive advantage. Competitiveness Review: An International Business Journal, 2022, 32(3):475-491. https://doi.org/10.1108/CR-03-2021-0046

[10] Powell K S , Lim E . The concept of "spatial knowledge" used by top-management-teams and CEOs in internationalization. Multinational Business Review, 2022, 30(2):173-191. https://doi.org/10.1108/MBR-07-2020-0144

[11] Zhan J , Zhao Y . Platform riders' occupational stigma consciousness and workplace deviant behavior: the mediating role of self-depletion. Baltic Journal of Management, 2022, 17(2):233-249. https://doi.org/10.1108/BJM-06-2021-0215

[12] Alrowaili Z A , Pourkashanian M , Ismail M S , et al. Fully-developed laminar flow in trapezoidal ducts with rounded corners: a numerical solution and case study. International Journal of Numerical Methods for Heat & Fluid Flow, 2022, 32(8):2682-2699. https://doi.org/10.1108/HFF-09-2021-0620

[13] Stock J R , Sharma N . The moderating impact of product shadows on ad effectiveness perceptions for gestalt versus component product frames, product presentation color, and consumer visual processing modes. Journal of Consumer Marketing, 2022, 39(4):345-357. https://doi.org/10.1108/JCM-04-2020-3776

[14] Nandankar P V , Nalla A R , Gaddam R R , et al. Early prediction and analysis of corona pandemic outbreak using deep learning technique. World Journal of Engineering, 2022, 19(4):559-569. https://doi.org/10.1108/WJE-03-2021-0145

[15] Saitoh K , Matsuyama S , Takai Y , et al. Elemental composition of particles emitted from aircraft: High-sensitivity elemental analysis by using micro-PIXE. International Journal of PIXE, 2020, 30(01n02):1-11. https://doi.org/10.1142/S0129083520500011

[16] Xue L , Zhao J , Jia Y , et al. Coordinated Control Strategies of PMSG-Based Wind Turbine for Smoothing Power Fluctuations. Power Systems, IEEE Transactions on, 2019, 34(1):391-401. https://doi.org/10.1109/TPWRS.2018.2866629

[17] Hy A , Ak B , Ma C , et al. Aero-thermal redesign of a high pressure turbine nozzle guide vane. Propulsion and Power Research, 2019, 8(4):310-319. https://doi.org/10.1016/j.jppr.2019.01.012

[18] Wang C , Zheng X , Zhang T , et al. The effect of porosity and number of unit cell on applicability of volume average approach in closed cell porous media. International Journal of Numerical Methods for Heat & Fluid Flow, 2022, 32(8):2778-2798. https://doi.org/10.1108/HFF-08-2021-0527